LRFD

Section 3.53

New: January 2005

CLICK HERE TO Index

3.53.1 Reinforcement
1.1 Single Column Design
1.2 Web Reinforcement

3.53.2 Miscellaneous Details
2.1 Access Doors

SINGLE COLUMN DESIGN

Design

Top Slab Modifications at Intermediate Bent:

The reinforcement shown below shall be used in place of the design slab steel.

① designed slab steel

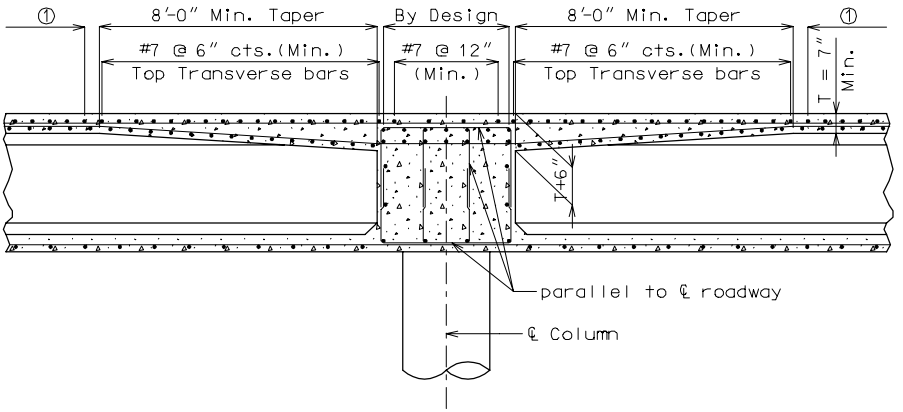

SECTION AT INT. BENT
(SINGLE COLUMN)

WEB REINFORCEMENT

Top Slab Modifications at Intermediate Bent:

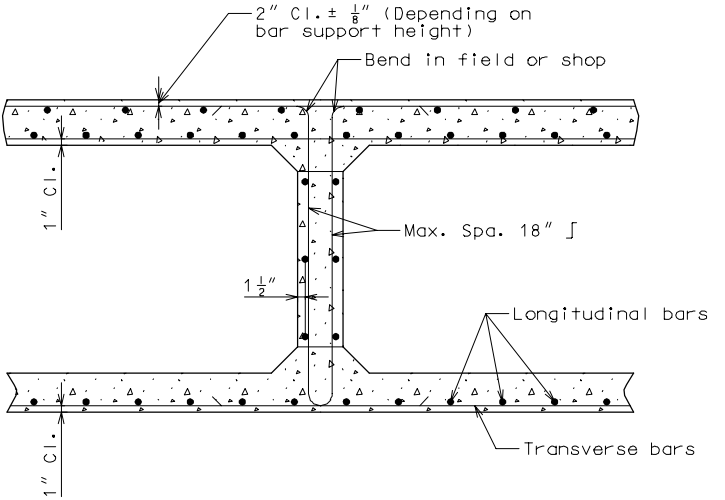

TYPICAL SECTION THRU WEB & SLABS

ACCESS DOORS (RECTANGLE)

Miscellaneous Details

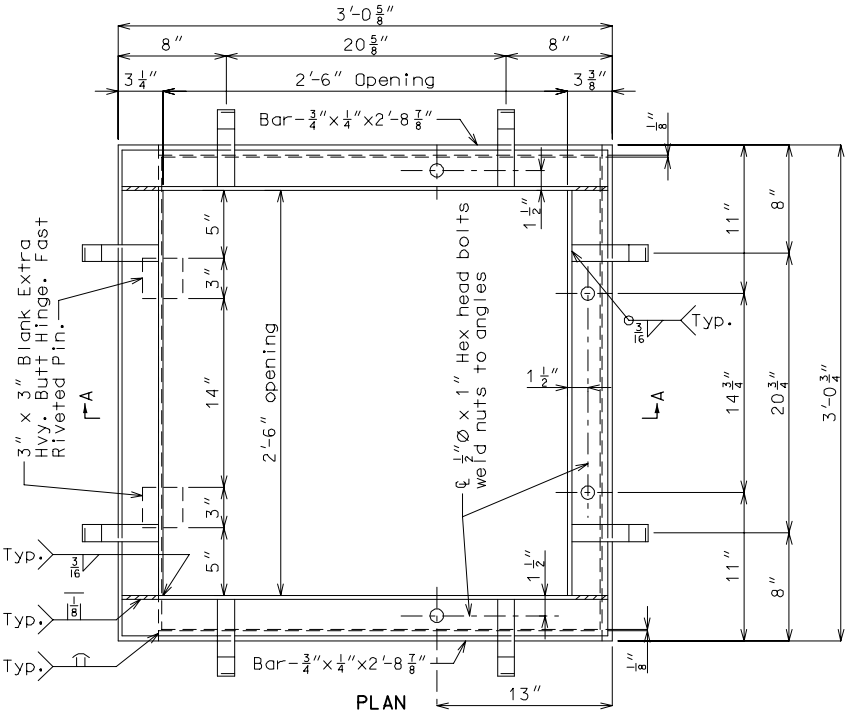

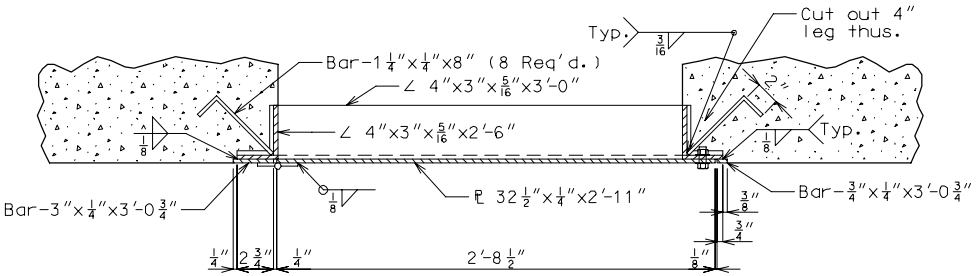

SECTION A-A

DETAILS OF ACCESS DOORS

WEIGHT 179#

ACCESS DOORS (OVAL)

Miscellaneous Details

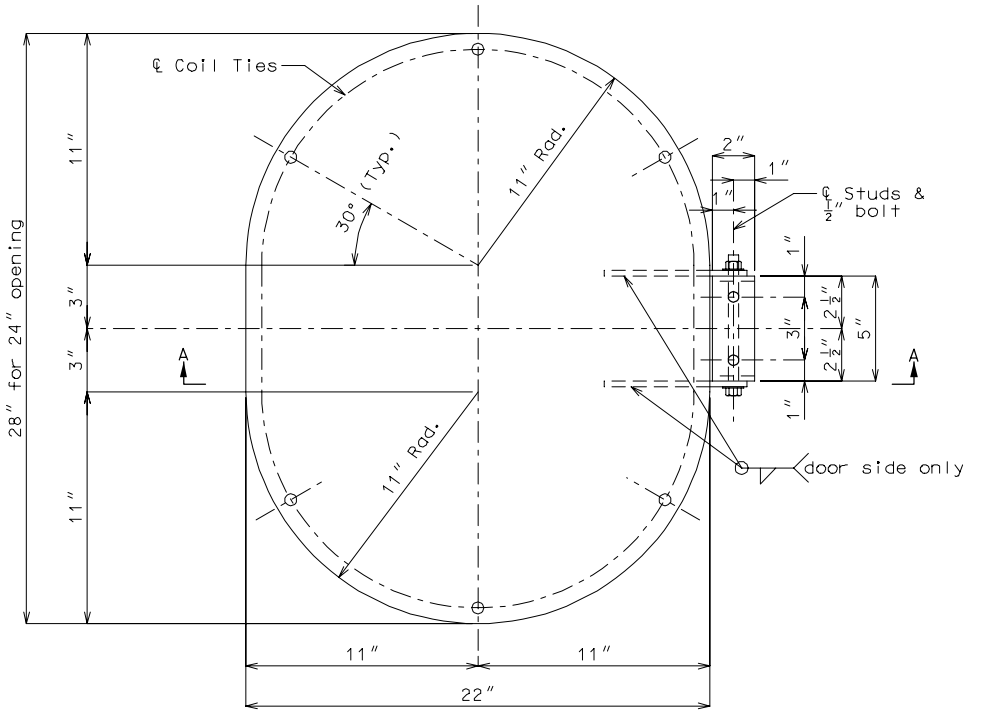

PLAN

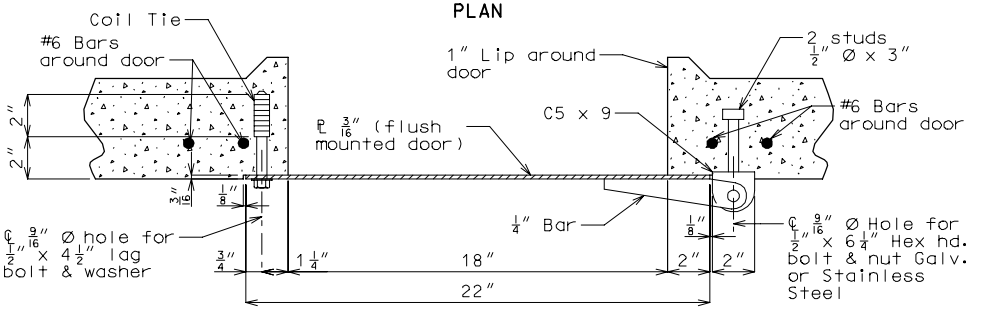

SECTION A-A

DETAILS OF ACCESS DOORS

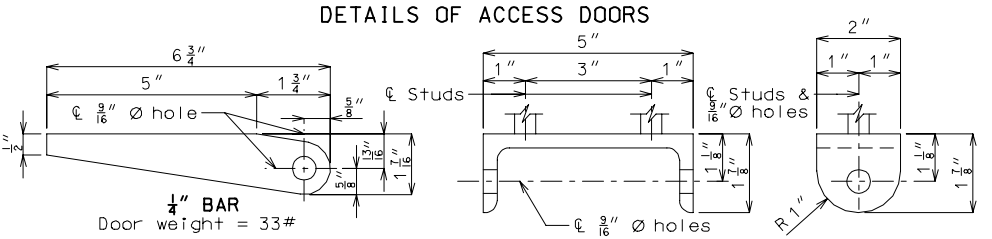

See Section 4A for painting or galvanizing note.

ACCESS DOORS LOCATION

Miscellaneous Details

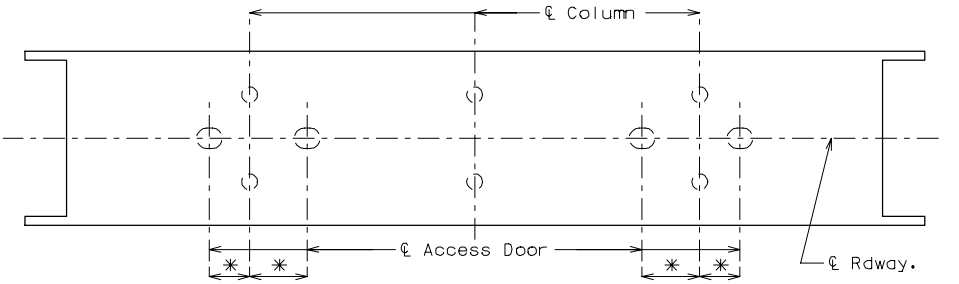

* Generally, access doors shall be positioned on or near 1/4 point of span and centerline of roadway.

It is permissible to shift postion of access doors when:
(1) Girder is located at centerline of bridge
(2) To prevent cutting additional slab bars
(3) To clear construction joints
(4) To maintain adequate vertical clearance

If possible, do not locate access doors over a roadway or berm.

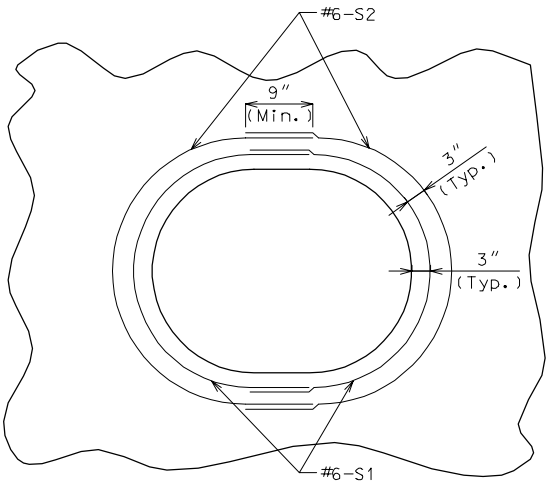

PLAN OF ACCESS DOOR
SHOWING REINFORCING

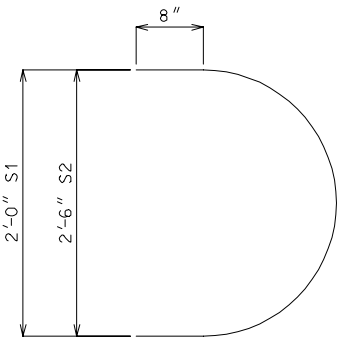

S1 = 4'-6" long
S2 = 5'-3" long