Missouri Department of Transportation

Bridge Division

Bridge Design Manual

Section 3.41

Revised 09/19/2002

Click Here for Index

Index

3.41.1 Design

1.1 Design Data (2 sheets)
1.2 Stringer Design (2 sheets)
1.3 Elevation of Stinger (3 sheets)
1.4 Flange Plate Lengths
1.5 Flange Plates - Section Properties (9 sheets)
1.6 Bearing Stiffeners (2 sheets)

3.41.2 Details

2.1 Bearing Stiffeners - End Diaph. Conn. Plates (5 sheets)
2.2 Bolted Field Splices
2.3 Bolted Field Splices - ASTM A709 Gr. 36 Steel (7 sheets)
2.4 Bolted Field Splices - Low Alloy Steel (9 sheets)
2.5 Bolted Field Splices - Low Alloy Steel (Beam and Splices Plates) (7 sheets)
2.6 Welded Splices Details

3.41.3 Bracing Details

3.1 End Diaphragm
3.2 Int. Diaphragms and Connections (2 sheets)
3.3 Int. Diaphragm Location (2 sheets)
3.4 Spacing of Int. Diaphragms from Field Splice

3.41.4 Miscellaneous Details

4.1 Offset for Curved Stringers
4.2 Stringer Elevation Variation Sketch

3.41.5 Quantities

5.1 Weight of End Diaphragms (2 sheets)
5.2 Weight of Cross Frames
5.3 Weight of Int. Diaphragms

DESIGN DATA

SLABS

REINFORCING STEEL FY = 60,000 PSI
CONCRETE FC = 1,600 PSI F'C = 4,000 PSI
N = 8

SIMPLE DESIGN SPAN

DESIGN SPAN = CENTER TO CENTER OF BEARINGS.

DEAD LOAD

SEE BRIDGE MANUAL SECTION 3.30.

LIVE LOAD DISTRIBUTION FACTORS

SEE BRIDGE MANUAL SECTION 1.3.

LIVE LOAD DEFLECTION ALLOWABLE

COMPOSITE = L/1000
NON-COMPOSITE = L/800

LIVE LOAD REACTION

LIVE LOAD (LL) / WHEEL LINE (WL) IS THE LIVE LOAD REACTION PER WHEEL LINE, NO DISTRIBUTION, NO IMPACT; MAXIMUM LIVE LOAD (LL) + IMPACT (I) IS THE LIVE LOAD REACTION X DISTRIBUTION FACTOR + IMPACT.

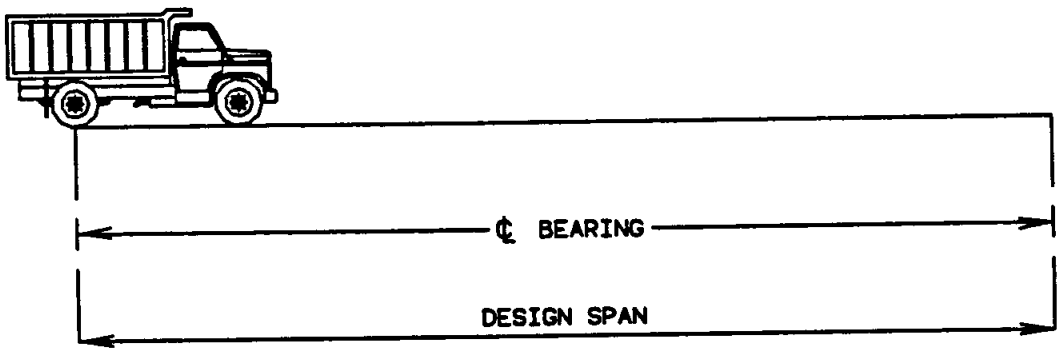

TRUCK LOADING

(GOVERNS THRU 33' SIMPLE SPANS FOR H20 AND ALL SIMPLE SPANS FOR HS20)

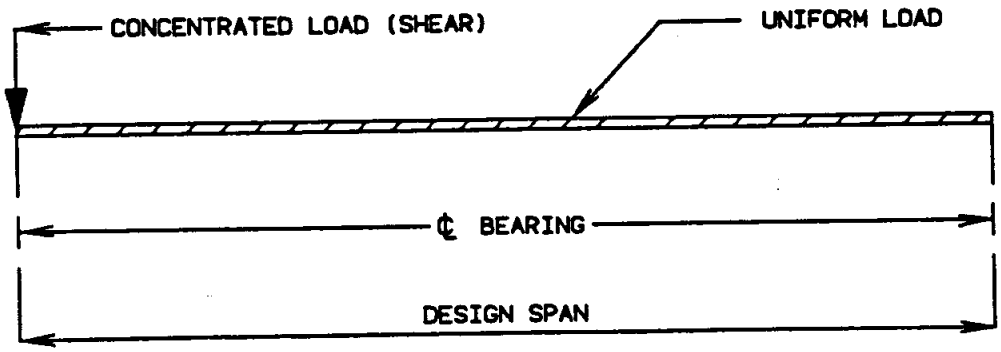

LANE LOADING

(GOVERNS FOR SIMPLE SPANS 35' AND OVER FOR H20)

DESIGN DATA
STRUCTURE LENGTH

TYPICAL CONTINUOUS STEEL STRUCTURES - INTEGRAL END BENTS:

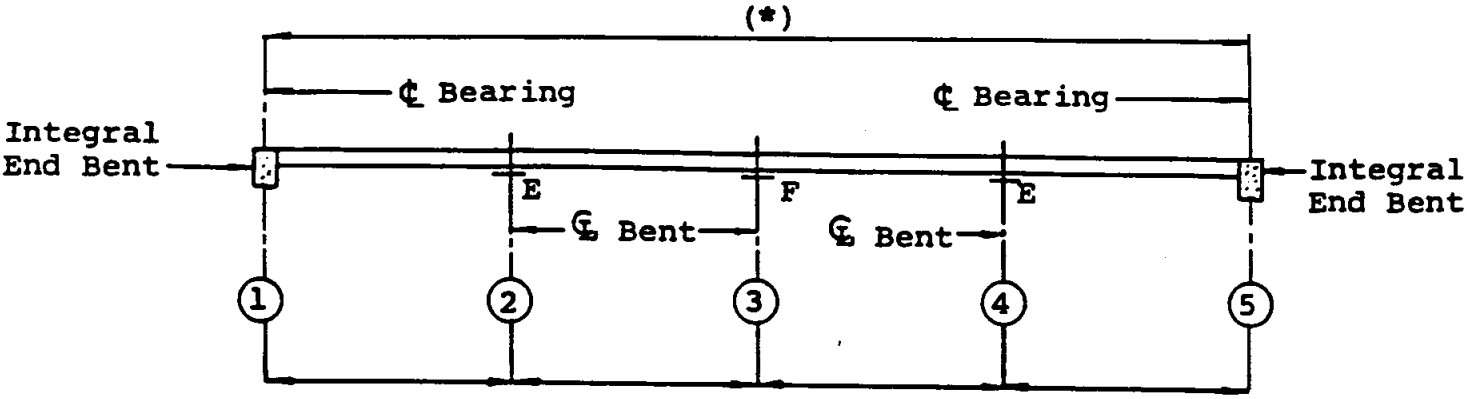

(*) Maximum length from End Bent to End Bent = 500 feet.

STRINGER DESIGN

STRESSES:

STEEL.....AASHTO - ARTICLE 10.2, 10.32
A36 F_Y = 36,000 PSI (F_S = 20,000 PSI)
A572 AND A588 F_Y = 50,000 PSI (F_S = 27,000 PSI)

CONCRETE.....SUPERSTRUCTURE F_C = 1,600 PSI N = 8
F'_C = 4,000 PSI

REINFORCING STEEL.....F_Y = 60,000 PSI

PHYSICAL PROPERTIES OF SPANS:

COMPOSITE DESIGN.....SEE BRIDGE MANUAL SECTION 3.40.

NON-COMPOSITE DESIGN.....USE "CONSTANT I" ANALYSIS.

WHEN THE NEUTRAL AXIS OF A COMPOSITE SECTION FALLS IN THE CONCRETE FLANGE, THE SECTION SHALL BE DESIGNED AS NON-COMPOSITE (21" WIDE FLANGE IS THE SMALLEST BEAM GENERALLY MADE COMPOSITE).

DEFLECTION:

LIVE LOAD DEFLECTION.....A.A.S.H.T.O. - ARTICLE 10.6
COMPOSITE - ALLOWABLE DEFLECTION L/1000
NON-COMPOSITE - ALLOWABLE DEFLECTION L/800

DEAD LOAD DEFLECTION.....COMPUTE AT 1/4 POINTS FOR BRIDGES WITH SPANS LESS THAN 75', AT 1/10 POINTS FOR SPANS 75' AND OVER. GIVE PERCENTAGE OF DEFLECTION DUE TO WEIGHT OF STRUCTURAL STEEL.

FATIGUE STRESS:

A.A.S.H.T.O. - ARTICLE 10.3 CASE I, CASE II OR CASE III
(AS SPECIFIED ON DESIGN LAYOUT GENERALLY WITHIN THE FOLLOWING LIMITATIONS).

CASE I: BRIDGES WITH THE TRUCK TRAFFIC COUNT OF 2500 OR MORE VEHICLES PER DAY. (ONE DIRECTION)

CASE II: BRIDGES WITH TRAFFIC COUNT OF 750 OR MORE VEHICLES PER DAY, AND LESS THAN 2500 TRUCK TRAFFIC COUNT (ONE DIRECTION) PER DAY.

CASE III: BRIDGES WITH TRAFFIC COUNT OF LESS THAN 750 VEHICLES PER DAY, EXCEPT WHEN LIVE LOADING IS H20 OR GREATER.

NO FATIGUE: BRIDGES WITH TRAFFIC COUNT OF LESS THAN 75 VEHICLES PER DAY.

ECONOMIC COMPARISON:

When comparing cost of low-alloy steels (A-572, Gr.-50; and A-588) to the cost of A-36 steel the low-alloy steels shall be figured at 3½¢ for A-572, Gr.-50 and 5¼¢ for A-588 per pound more than A-36 steel. Cost comparisions will be based on current average bid prices that may be obtained from the CHIEF DESIGNER, for comparable bridges.

No overstress will be permitted in the design.

TOTAL CAPACITY OF EXTERIOR STRINGERS:
(DEAD LOAD AND LIVE LOAD)

In no case shall an exterior stringer have less carrying capacity than an interior stringer.

ELEVATION OF STRINGERS SIMPLE SPANS

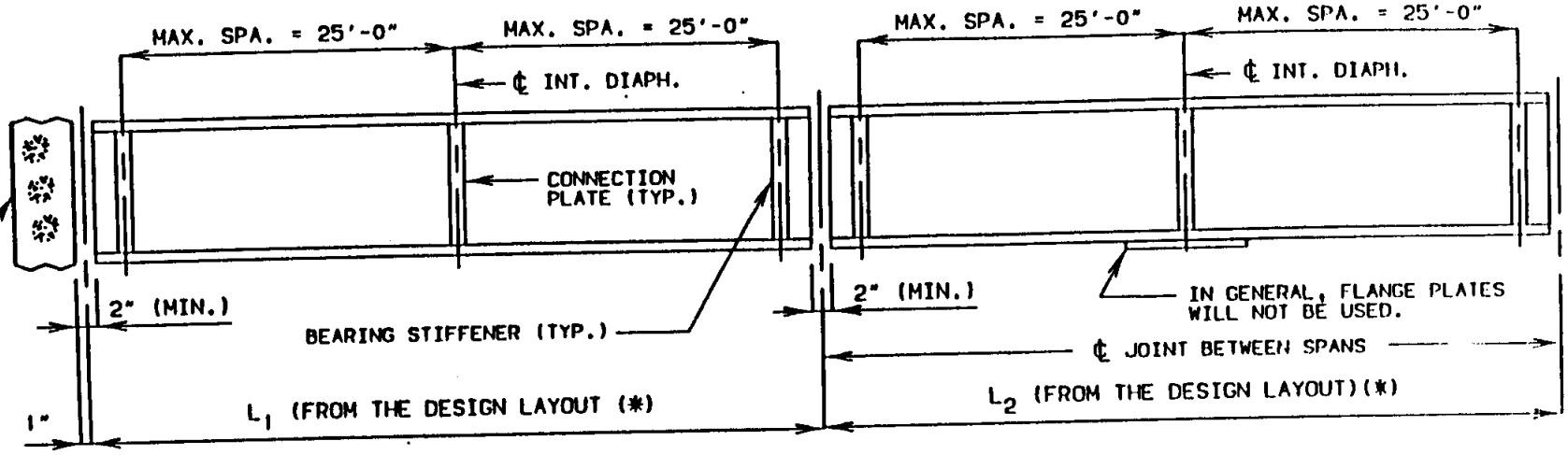

(*) DESIGN LAYOUT LENGTHS ARE HORIZONTAL LENGTHS. (STRINGER LENGTH SHOULD BE ADJUSTED ACCORDING TO GRADE.)

ELEVATION OF STRINGERS

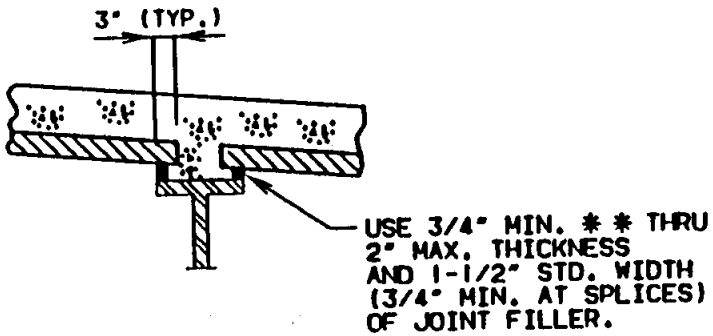

TYPICAL HAUNCH DETAIL
(P/C P/S PANEL SECTION)

* * OVER SPLICE PLATES AND COVER PLATES USE 1/4" MIN.

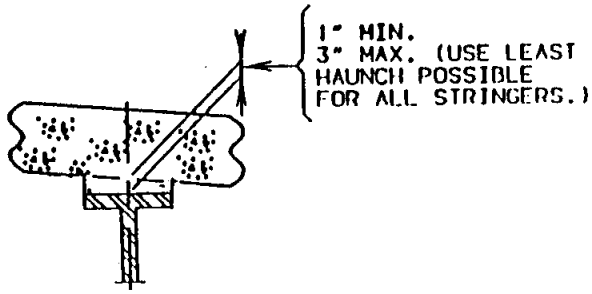

TYPICAL HAUNCH DETAIL
(C.I.P. SECTION)

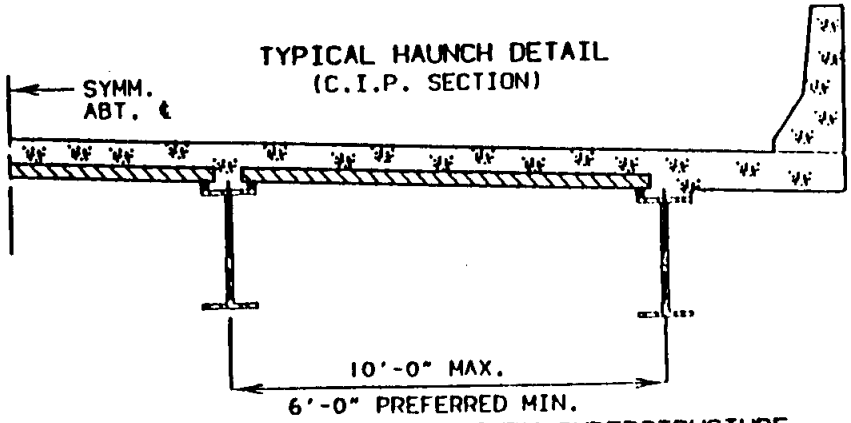

TYPICAL PART SECTION THRU SUPERSTRUCTURE

ELEVATION OF STRINGERS CONTINUOUS SPANS

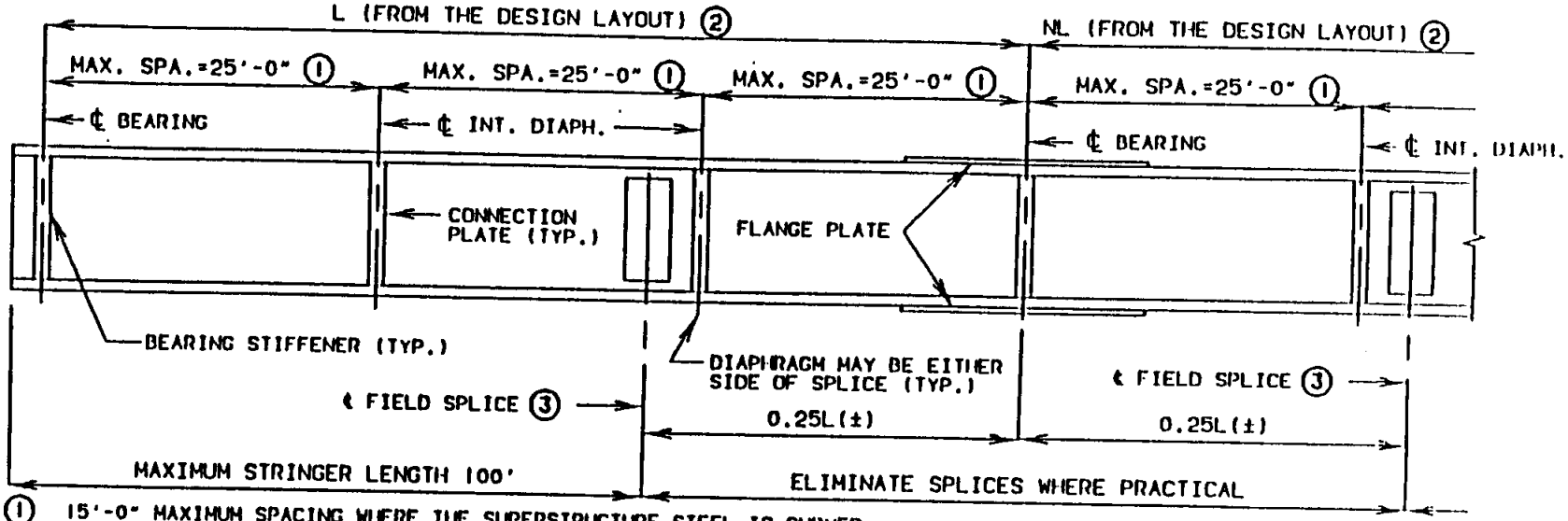

① 15'-0" MAXIMUM SPACING WHERE THE SUPERSTRUCTURE STEEL IS CURVED.
② DESIGN LAYOUT LENGTHS ARE HORIZONTAL LENGTHS. (STRINGER LENGTH SHOULD BE ADJUSTED ACCORDING TO GRADE.)
③ LOCATE FIELD SPLICES AS CLOSE AS PRACTICAL TO THE POINT OF THE DEAD LOAD CONTRAFLEXURE.

ELEVATION OF STRINGERS

NOTE: OMIT BEAM SPLICE WHEN THE SPAN LENGTHS PERMIT, AND WHEN THE WEIGHT OF THE SPLICE MATERIAL EXCEEDS ONE-HALF OF THE INCREASE IN STRINGER WEIGHT DUE TO SPLICE OMISSION.

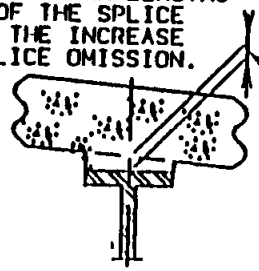

1" MIN. 3" MAX. (USE LEAST HAUNCH POSSIBLE FOR ALL STRINGERS.)

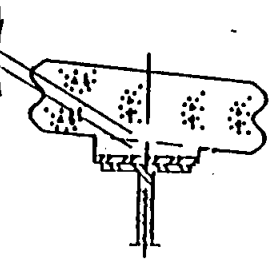

USE DETAIL "A" WHEN THE FLANGE PLATES ARE WIDER THAN THE BEAM FLANGES. IF ALL THE FLANGE PLATES ARE NARROWER THAN THE BEAM FLANGES, THEN THIS DETAIL IS NOT NECESSARY.

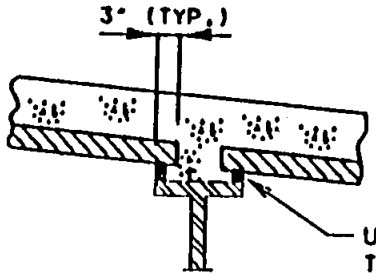

TYPICAL HAUNCH DETAIL
(C.I.P. SECTION)

USE 3/4" MIN. (④) THRU 2" MAX. THICKNESS AND 1-1/2" STD. WIDTH (3/4" MIN. AT SPLICES) OF JOINT FILLER.

TYPICAL HAUNCH DETAIL
(P/C P/S PANEL SECTION)

(④) OVER SPLICE PLATES AND COVER PLATES USE 1/4" MIN.

DETAIL "A"
(C.I.P. SECTION)

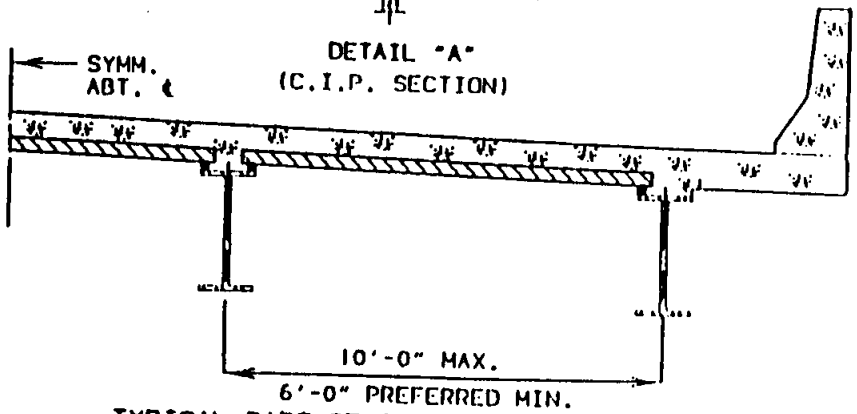

TYPICAL PART SECTION THRU SUPERSTRUCTURE

ELEVATION OF STRINGER

HINGED BEAM-HANGER BEAM & PIN ℞ CONNECTIONS

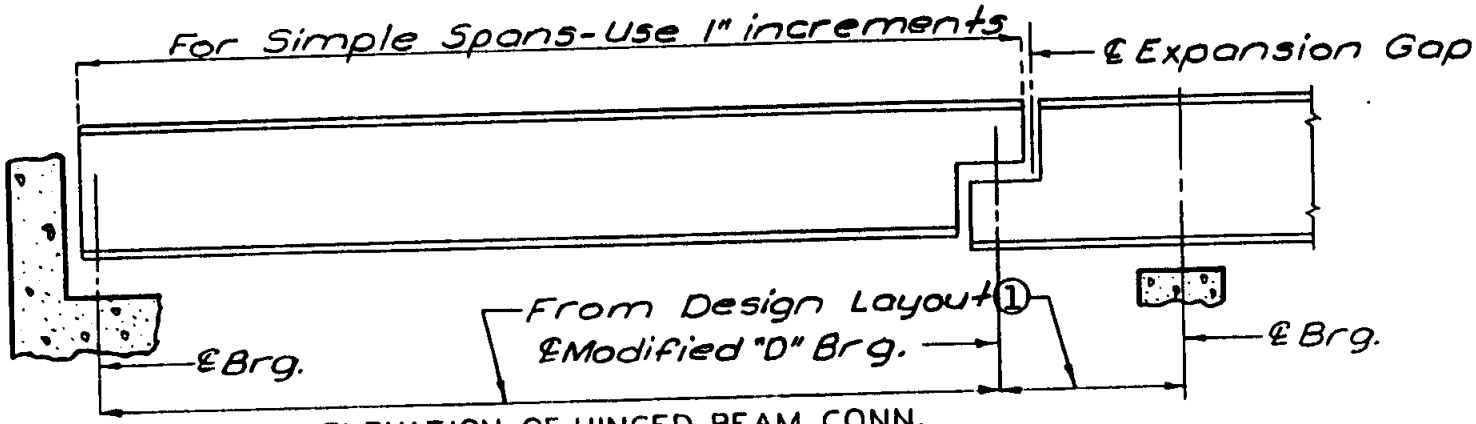

ELEVATION OF HINGED BEAM CONN.

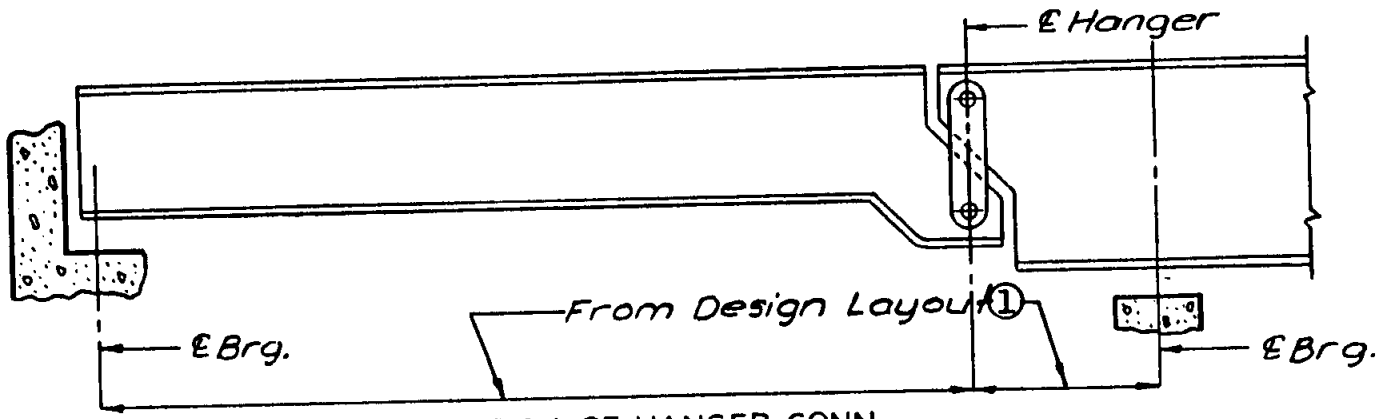

ELEVATION OF HANGER CONN.

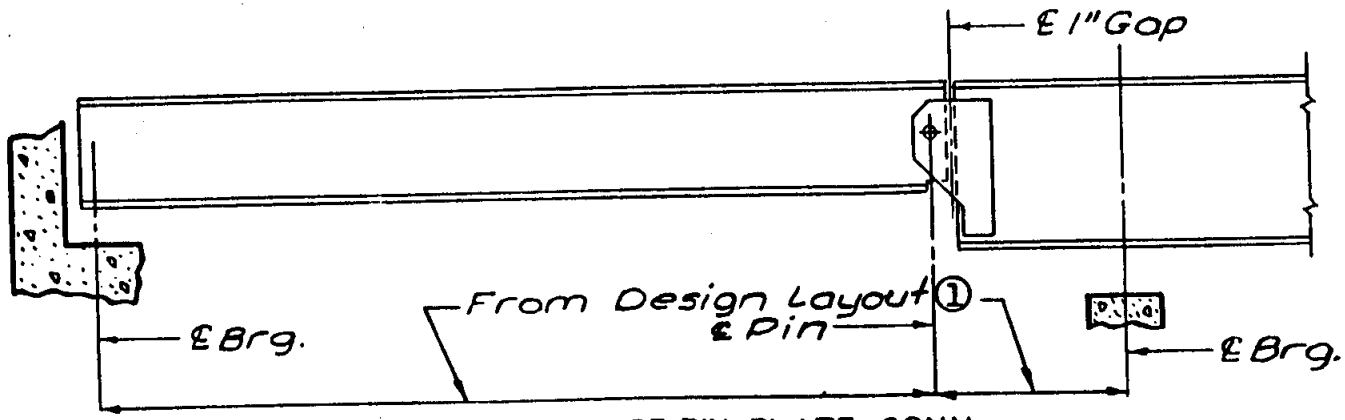

ELEVATION OF PIN PLATE CONN.

① Design Layout lengths are horizontal lengths. (Girder length should be adjusted according to grade)

FLANGE PLATES

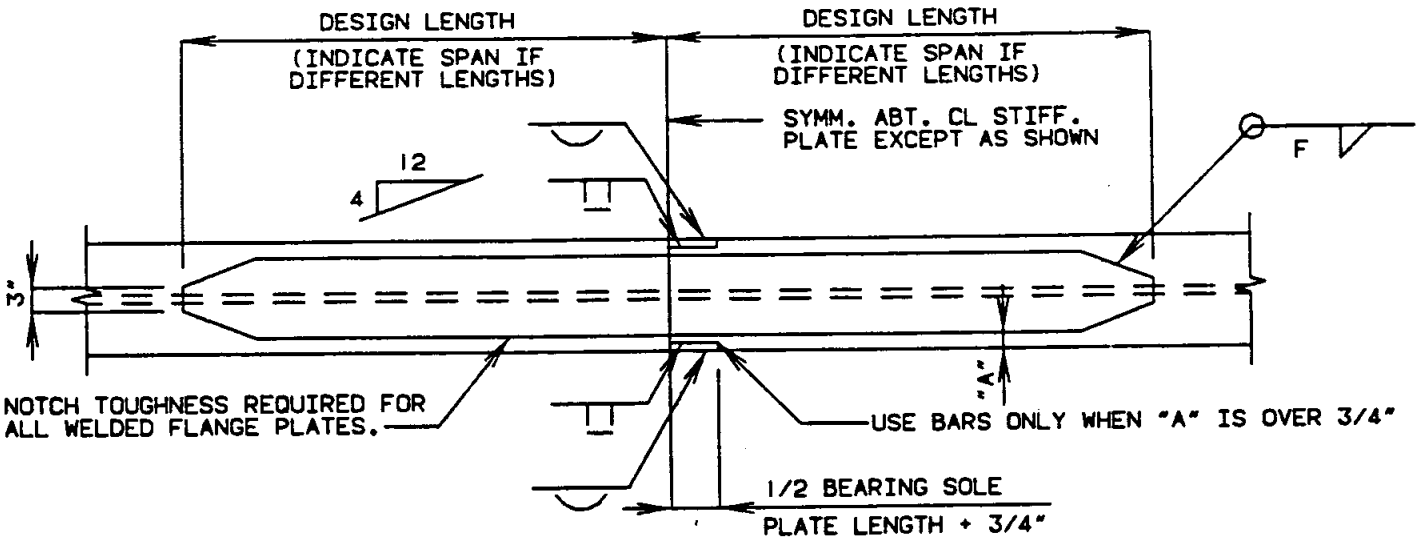

TOP FLANGE **BOTTOM FLANGE**

DETAILS OF FLANGE PLATES AT INTERMEDIATE BENTS

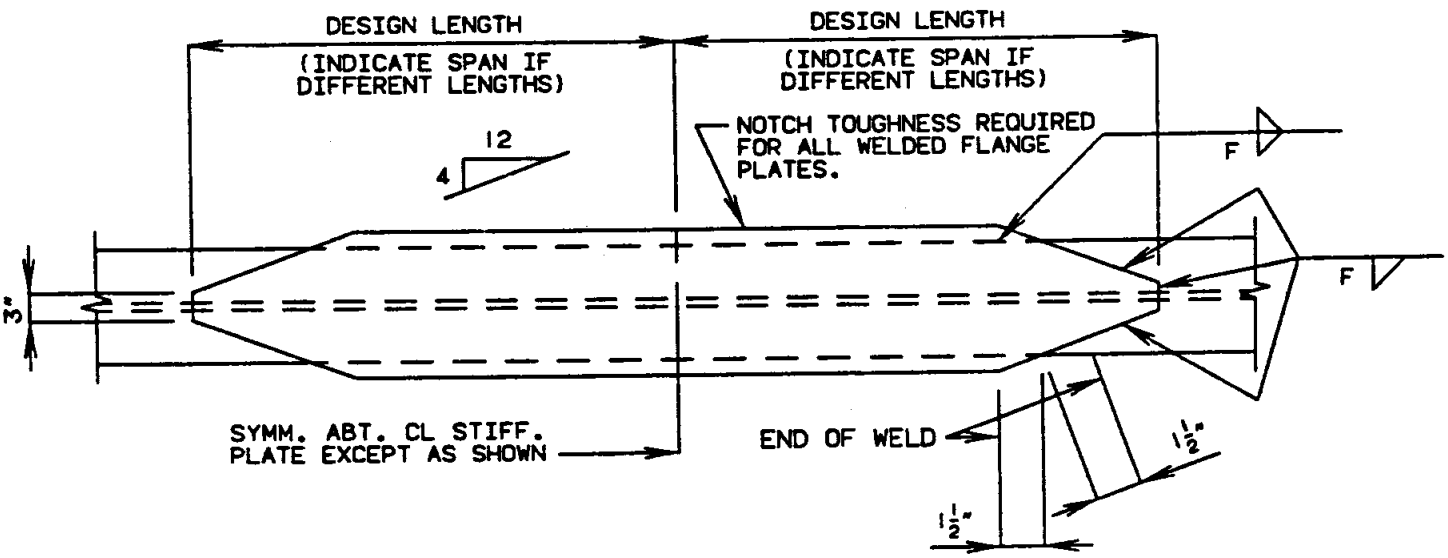

DETAILS OF FLANGE PLATES AT INTERMEDIATE BENTS (TOP AND BOTTOM FLANGES)

ALLOWABLE FLANGE PLATE SIZES ARE AS SHOWN WITH THE SECTION PROPERTIES. DIFFERENT PLATE SIZES MAY BE USED ON ADJACENT STRINGERS.

LENGTHS TO BE SHOWN ON THE BRIDGE PLANS ARE THOSE REQUIRED AS FOLLOWS:
LENGTHS EACH SIDE OF THE BEARING SHALL BE THE LARGER OF:

1) THEORETICAL END + TERMINAL DISTANCE (•••)

OR

2) POINT WHERE THE STRESS RANGE (TENSION OR REVERSAL) IN THE BEAM FLANGE IS EQUAL TO OR LESS THAN ALLOWABLE FATIQUE STRESS RANGE (CAT. E OR E') OR WHERE THE BEAM FLANGE IS IN COMPRESSION, WHICHEVER IS SMALLER.

(USE CAT. E WHEN THE FLANGE IS LESS THAN OR EQUAL TO 0.8 INCH THICK.)

(USE CAT. E' WHEN THE FLANGE IS GREATER THAN 0.8 INCH THICK.)

(•••) WHERE THE THEORETICAL END = THE POINT WHERE THE FLANGE STRESS WITHOUT COVER PLATE $\leq$ BASE ALLOWABLE STRESS. TERMINAL DISTANCE = 1-1/2 X NOMINAL COVER PLATE WIDTH.

THE TOTAL LENGTH OF THE COVER PLATE $\geq$ (2D + 3'-0"). WHERE "D" = DEPTH OF BEAM IN FEET.

WHEN REQUIRED LENGTHS OF PLATES VARY BY 12" OR LESS ON ADJACENT STRINGERS OR ON EACH SIDE OF THE CENTERLINE STIFFENER PLATE, USE GREATER LENGTH FOR ALL SUCH POSITIONS.

PLATE LENGTHS TAKEN FROM THE COMPUTER PROGRAMS SHOULD BE ROUNDED UP TO AT LEAST THE NEAREST 6".

FLANGE PLATES - SECTION PROPERTIES
GROSS SECTION

SIZE BEAM	WELD F	BAR WIDTH (A) FOR									
		6" PL	7" PL	8" PL	9" PL	10" PL	11" PL	12" PL	13" PL	14" PL	
21"	1/4	7/8"									①
24"	1/4	1-1/8"	5/8"								②
27"	5/16		1-1/8"	5/8"							③
30"	5/16		1-3/8"	7/8"							④
33"	5/16			1-3/8"	7/8"						④
36"	5/16				1-1/8"	5/8"					

Indicates this plate size not to be used with this particular beam size.

Indicates bars not needed with this size plate.

① For W21 x 62 thru W21 x 73 (no bar required for W21 x 57)

② Use F = 5/16" for W24 x 84 and W24 x 94.

③ Use F = 1/4" for W27 x 84 and W27 x 94.

④ Use F = 1/4" for W30 x 99 and W33 x 118.

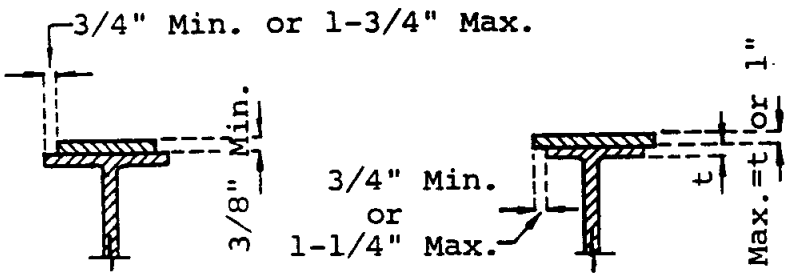

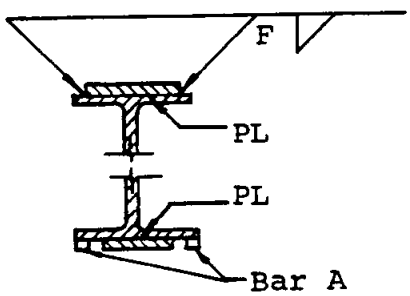

Note: Only the plate sizes indicated in tabulation will comply with design criteria for related stringer sizes, and at the same time hold plate widths to the nearest inch.

WF	SM in.^{3}	Plate	I in.^{4}	SM in.^{3}
W21x57	111	5x3/8	1600.7	146.8
		9	1945.3	178.4
		5x1/2	1751.0	158.7
		9	2215.9	200.9
		5x5/8	1904.7	170.7
		9	2492.5	223.4
W21x62	127	6x3/8	1843.5	169.6
		6x1/2	2022.7	183.9
		10	2484.5	225.9
		6x5/8	2206.0	198.4
		10	2790.0	250.9

FLANGE PLATES-SECTION PROPERTIES
GROSS SECTION (CONT.)

WF	SM in.^{3}	Plate	I in.^{4}	SM in.^{3}
W21x68	140	6x3/8	2000.3	182.8
		6x1/2	2181.8	197.2
		10	2649.6	239.5
		6x5/8	2367.4	211.6
		10	2959.0	264.4
W21x73	151	6x3/8	2125.6	193.3
		6x1/2	2308.9	207.6
		10	2781.6	250.1
		6x5/8	2496.4	222.0
		10	3094.0	275.1
		6x3/4	2688.0	236.4
		10	3413.3	300.2
W24x68	154	6x3/8	2483.7	202.9
		7	2592.6	211.8
		6x1/2	2710.6	219.2
		7	2857.4	231.1
		11	3444.5	278.6
		6x5/8	2942.2	235.6
		7	3127.6	250.4
		11	3869.0	309.8
W24x76	176	6x3/8	2764.0	224.1
		7	2874.7	233.0
		6x1/2	2994.5	240.3
		7	3143.6	252.3
		11	3739.9	300.1
		6x5/8	3229.6	256.6
		7	3417.9	271.6
		11	4170.9	331.4
W24x84	196	6x3/8	3043.9	245.0
		7	3156.2	254.0
		6x1/2	3277.7	261.2
		7	3429.0	273.2
		11	4034.2	321.4
		6x5/8	3516.2	277.4
		7	3707.3	292.5
		11	4471.4	352.8
		6x3/4	3759.4	293.7
		7	3991.0	311.8
		11	4917.3	384.2
W24x94	222	6x3/8	3385.5	270.2
		7	3499.8	279.3
		6x1/2	3623.3	286.3
		7	3777.2	298.5
		11	4392.7	347.1
		6x5/8	3865.8	302.5
		7	4060.1	317.7
		11	4837.3	378.5

FLANGE PLATES-SECTION PROPERTIES
GROSS SECTION (CONT.)

WF	SM $in.^3$	Plate	I $in.^4$	SM $in.^3$
W24x94	222	6x3/4	4113.0	318.7
		7	4348.5	336.9
		11	5290.5	409.9
		6x7/8	4365.0	335.0
		7	4642.5	356.3
		11	5752.5	441.5
W27x84	213	7x3/8	3812.8	277.7
		8	3950.4	287.7
		7x1/2	4145.7	299.2
		8	4330.8	312.6
		12	5071.1	366.0
		7x5/8	4484.5	320.8
		8	4718.0	337.5
		12	5652.0	404.3
W27x94	243	7x3/8	4247.8	307.0
		8	4387.5	317.1
		7x1/2	4585.7	328.5
		8	4773.7	341.9
		12	5525.6	395.8
		7x5/8	4929.7	350.0
		8	5166.8	366.8
		12	6115.2	434.2
		7x3/4	5279.8	371.5
		8	5566.9	391.8
		12	6715.3	472.6
W27x102	267	7x3/8	4610.0	331.2
		8	4751.5	341.3
		7x1/2	4952.1	352.6
		8	5142.4	366.1
		12	5903.6	420.3
		7x5/8	5300.3	374.0
		8	5540.3	391.0
		12	6500.4	458.7
		7x3/4	5654.5	395.6
		8	5945.2	415.9
		12	7107.8	497.2
W27x114	299	7x3/8	5094.5	363.4
		8	5238.0	373.6
		7x1/2	5441.5	384.7
		8	5634.6	398.3
		12	6406.8	452.9
		7x5/8	5794.6	406.1
		8	6038.1	423.1
		12	7012.2	491.4
		7x3/4	6153.9	427.5
		8	6448.7	448.0
		12	7628.1	529.9
		7x7/8	6519.4	449.0
		8	6866.4	472.9
		12	8254.6	568.5

FLANGE PLATES-SECTION PROPERTIES
GROSS SECTION (CONT.)

WF	SM $in.^3$	Plate	I $in.^4$	SM $in.^3$
W30x99	269	7x3/8	5173.2	340.3
		8	5342.2	351.4
		9	5511.3	362.6
		7x1/2	5580.8	364.1
		8	5808.0	379.0
		9	6035.3	393.8
		12	6717.1	438.3
		7x5/8	5995.0	388.0
		8	6281.4	406.6
		9	6567.9	425.1
		12	7427.2	480.7
		13	7713.6	499.2
W30x108	299	7x3/8	5667.4	370.7
		8	5838.5	381.8
		9	6009.6	393.0
		7x1/2	6079.8	394.4
		8	6309.8	409.3
		9	6539.8	424.2
		12	7229.7	469.0
		7x5/8	6498.9	418.2
		8	6788.8	436.9
		9	7078.6	455.5
		12x5/8	7948.1	511.5
		13	8238.0	530.1
		7x3/4	6924.7	442.0
		8	7275.4	464.4
		9	7626.1	486.8
		12	8678.1	554.0
		13	9028.8	576.4
W30x116	329	7x3/8	6141.8	399.3
		8	6314.9	410.6
		9	6488.0	421.8
		7x1/2	6559.0	423.0
		8	6791.7	438.0
		9	7024.4	453.0
		12	7722.6	498.1
		7x5/8	6983.0	446.8
		8	7276.3	465.5
		9	7569.5	484.3
		12	8449.4	540.6
		13	8742.7	559.3
		7x3/4	7413.7	470.6
		8	7768.5	493.1
		9	8123.3	515.6
		12	9187.8	583.2
		13	9542.6	605.7
		7x7/8	7851.3	494.4
		8	8268.6	520.7
		9	8685.9	547.0
		12	9937.9	625.8
		13	10355.2	652.1

FLANGE PLATES-SECTION PROPERTIES
GROSS SECTION (CONT.)

WF	SM in.^{3}	Plate	I in.^{4}	SM in.^{3}
W30x124	355	7x3/8	6584.6	425.9
		8	6759.5	437.2
		9	6934.4	448.5
		7x1/2	7006.1	449.5
		8	7241.3	464.6
		9	7476.5	479.7
		12	8181.9	525.0
		7x5/8	7434.5	473.2
		8	7730.8	492.1
		9	8027.2	511.0
		12	8916.2	567.5
		13	9212.6	586.4
		7x3/4	7869.6	497.0
		8	8228.1	519.6
		9	8586.7	542.3
		12	9662.2	610.2
		13	10020.7	632.8
		7x7/8	8311.6	520.8
		8	8733.3	547.2
		9	9154.9	573.6
		12	10419.9	652.9
		13	10841.6	679.3
W30x132	380	7x3/8	7005.8	451.1
		8	7182.3	462.5
		9	7358.9	473.8
		7x1/2	7431.2	474.7
		8	7668.5	489.8
		9	7905.8	505.0
		12	8617.8	550.5
		7x5/8	7863.4	498.3
		8	8162.4	517.3
		9	8461.5	536.2
		12	9358.6	593.1
		13	9657.7	612.0
		7x3/4	8302.4	522.0
		8	8664.2	544.7
		9	9025.9	567.5
		12	10111.3	635.7
		13	10473.0	658.5
		7x7/8	8748.3	545.7
		8	9173.8	572.3
		9	9599.2	598.8
		12	10875.6	678.5
		13	11301.1	705.0
		7x1	9201.1	569.5
		8	9691.3	599.9
		9	10181.4	630.2
		12	11651.9	721.3
		13	12142.0	751.6

FLANGE PLATES-SECTION PROPERTIES
GROSS SECTION (CONT.)

WF	SM in.^{3}	Plate	I in.^{4}	SM in.^{3}
W33x118	359	8x3/8	7556.8	449.7
		9	7763.9	462.0
		8x1/2	8125.8	480.0
		9	8404.0	496.4
		10	8682.2	512.8
		8x5/8	8703.1	510.3
		9	9053.5	530.8
		10	9403.9	551.4
		13	10455.1	613.0
		14	10805.4	633.6
		8x3/4	9288.9	540.7
		9	9712.5	565.3
		10	10136.1	590.0
		13	11407.0	664.0
		14	11830.6	688.6
W33x130	406	8x3/8	8389.9	495.8
		9	8599.8	508.3
		8x1/2	8966.6	526.0
		9	9248.6	542.6
		10	9530.7	559.1
		8x5/8	9551.7	556.3
		9	9907.0	577.0
		10	10262.2	597.7
		13	11327.8	659.7
		14	11683.1	680.4
		8x3/4	10145.4	586.6
		9	10574.9	611.4
		10	11004.3	636.3
		13	12292.6	710.8
		14	12722.0	735.6
		8x7/8	10747.7	617.0
		9	11252.4	645.9
		10	11757.1	674.9
		13	13271.2	761.8
		14	13775.9	790.8
W33x141	448	8x3/8	9151.0	537.5
		9	9363.6	550.0
		8x1/2	9734.9	567.6
		9	10020.5	584.3
		10	10306.1	600.9
		8x5/8	10327.3	597.8
		9	10686.9	618.6
		10	11046.6	639.4
		13	12125.5	701.9
		14	12485.2	722.7
		8x3/4	10928.2	628.1
		9	11363.0	653.0
		10	11797.8	678.0
		13	13102.1	753.0
		14	13536.9	778.0
		8x7/8	11537.8	658.4

FLANGE PLATES-SECTION PROPERTIES
GROSS SECTION (CONT.)

WF	SM in.^{3}	Plate	I in.^{4}	SM in.^{3}
W33x141	448	9x7/8	12048.7	687.5
		10	12559.7	716.7
		13	14092.6	804.1
		14	14603.6	833.3
W33x152	487	8x3/8	9880.3	577.1
		9	10095.3	589.7
		8x1/2	10470.6	607.2
		9	10759.5	623.9
		10	11048.3	640.7
		8x5/8	11069.6	637.3
		9	11433.3	658.2
		10	11797.0	679.2
		13	12888.1	742.0
		14	13251.8	762.9
		8x3/4	11677.1	667.5
		9	12116.8	692.6
		10	12556.4	717.7
		13	13875.3	793.1
		14	14315.0	818.2
		8x7/8	12293.3	697.7
		9	12810.0	727.0
		10	13326.7	756.3
		13	14876.7	844.3
		14	15393.3	873.6
		8x1	12918.2	728.0
		9	13513.0	761.5
		10	14107.8	795.0
		13	15892.1	895.6
		14	16486.9	929.1
W36x135	439	9x3/8	9977.9	549.7
		9x1/2	10724.1	586.8
		10	11049.0	604.6
		9x5/8	11480.5	623.9
		10	11889.5	646.2
		14	13525.3	735.1
		9x3/4	12247.2	661.1
		10	12741.3	687.8
		14	14717.9	794.5
W36x150	504	9x3/8	11254.4	615.0
		9x1/2	12013.0	652.0
		10	12343.3	669.9
		9x5/8	12781.8	689.0
		10	13197.6	711.5
		14	14860.6	801.1
		9x3/4	13561.0	726.2
		10	14063.3	753.1
		14	16072.7	860.6
		9x7/8	14350.6	763.3
		10	14940.7	794.7
		14	17300.9	920.3

FLANGE PLATES-SECTION PROPERTIES
GROSS SECTION (CONT.)

WF	SM in.^{3}	Plate	I in.^{4}	SM in.^{3}
W36x160	542	9x3/8	11984.0	652.0
		9x1/2	12749.2	689.0
		10	13082.4	707.0
		9x5/8	13524.7	726.0
		10	13944.1	748.5
		14	15621.8	838.5
		9x3/4	14310.6	763.0
		10	14817.4	790.0
		14	16844.3	898.1
		9x7/8	15107.0	800.2
		10	15702.2	831.7
		14	18083.1	957.8
		9x1	15913.8	837.3
		10	16598.7	873.4
		14	19338.2	1017.5
W36x170	580	9x3/8	12753.7	690.9
		9x1/2	13525.5	727.8
		10	13861.7	745.9
		9x5/8	14307.8	764.7
		10	14730.8	787.3
		14	16423.2	877.8
		9x3/4	15100.4	801.7
		10	15611.6	828.9
		14	17656.2	937.4
		9x7/8	15903.6	838.8
		10	16503.9	870.5
		14	18905.5	997.1
		9x1	16717.2	875.9
		10	17408.0	912.1
		14	20171.3	1056.9
W36x182	623	9x3/8	13573.5	732.1
		9x1/2	14352.0	768.9
		10	14691.1	787.1
		9x5/8	15140.9	805.8
		10	15567.7	828.5
		14	17274.8	919.4
		9x3/4	15940.4	842.7
		10	16456.0	870.0
		14	18518.4	979.0
		9x7/8	16750.3	879.7
		10	17355.9	911.5
		14	19778.3	1038.8
		9x1	17570.9	916.8
		10	18267.6	953.2
		14	21054.7	1098.6
W36x194	664	9x3/8	14393.4	773.0
		9x1/2	15178.6	809.7
		10	15520.6	828.0
		9x5/8	15974.3	846.5
		10	16404.8	869.4
		14	18126.7	960.6

FLANGE PLATES-SECTION PROPERTIES
GROSS SECTION (CONT.)

WF	SM in.^{3}	Plate	I in.^{4}	SM in.^{3}
W36x194	664	9x3/4	16780.5	883.4
		10	17300.6	910.8
		14	19380.8	1020.3
		9x7/8	17597.3	920.4
		10	18208.1	952.3
		14	20651.4	1080.1
		9x1	18424.7	957.4
		10	19127.5	993.9
		14	21938.5	1140.0

BEARING STIFFENERS **Design**

SQUARE STRUCTURES

Use bearing stiffeners on non-integral end bents and all intermediate bents.

Fs (bearing) = 29,000 psi (AASHTO Article 10.2, 10.32)
Maximum width = 12 x thickness
Bearing pressure on stiffeners shall be figured at the bottom flange.

The table below establishes the criteria for stiffener plates at square connections except for weld size "W" which is applicable to square or skewed connections.

For skewed connections, the width and thickness is indicated on the following manual sheets. The designer shall increase the skewed plate thickness if it does not provide an area equivalent to the square plate.

WF	Plate	Cap. K	"W"	
21	3-1/2 x 3/8	43.5	1/4	
	3-1/2 x 1/2	58.0	1/4	
	3-1/2 x 5/8	72.5	1/4	
	3-1/2 x 3/4	87.0	1/4	
	3-1/2 x 7/8	101.5	5/16	
24	4 x 3/8	54.4	1/4	
	4 x 1/2	72.5	1/4	
	4 x 5/8	90.6	1/4	
	4 x 3/4	108.7	1/4	
	4 x 7/8	126.9	5/16	
27 & 30	4-1/2 x 3/8	65.2	1/4	
	4-1/2 x 1/2	87.0	1/4	
	4-1/2 x 5/8	108.7	1/4	
	4-1/2 x 3/4	130.5	1/4	
	4-1/2 x 7/8	152.2	5/16	
33	5 x 1/2	101.5	1/4	
	5 x 5/8	126.9	1/4	
	5 x 3/4	152.2	1/4	
	5 x 7/8	177.6	5/16	
	5 x 1	203.0	5/16	
36	5-1/2 x 1/2	116.0	1/4	(✱✱✱)
	5-1/2 x 5/8	145.0	1/4	
	5-1/2 x 3/4	174.0	1/4	
	5-1/2 x 7/8	203.0	5/16	
	5-1/2 x 1	232.0	5/16	
	5-1/2 x 1-1/8	261.0	5/16	

(✱✱✱) W36 x 194 "W" = 5/16

Bearing stiffeners shall be fabricated from ASTM A709 Grade 36 Steel unless weathering characteristics of ASTM A709 Grade 50W are required.

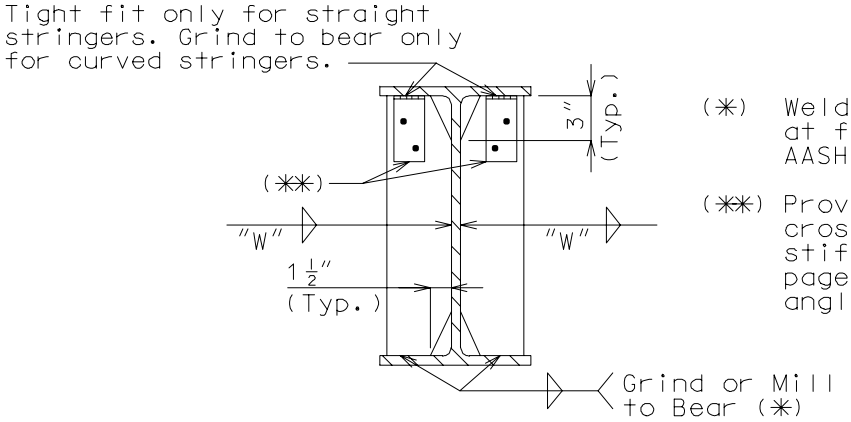

(✱) Weld as positive connection at flanges in accordance with AASHTO 10.19.3.2.

(✱✱) Provide connection angle if cross frame is connected to stiffener, see Section 3.41 page 3.2-2 for connection angle details.

BEARING STIFFENERS LOCATION **Design**

SKEWED STRUCTURES

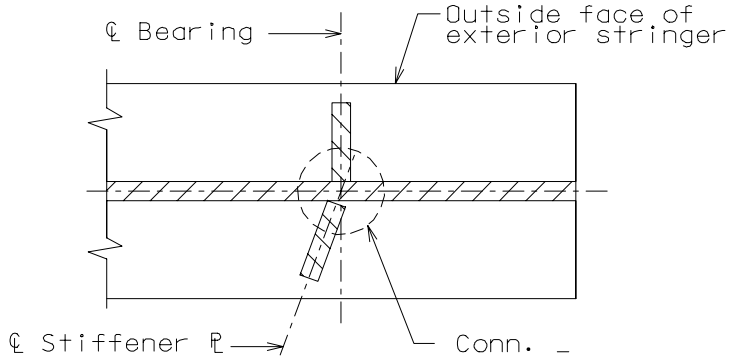

TYPICAL DETAIL LOCATING STIFFENER PLATE SKEWS THRU 25°

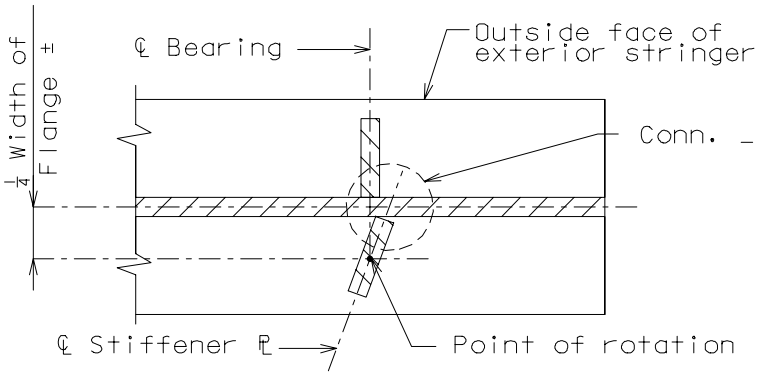

TYPICAL DETAIL LOCATING STIFFENER PLATE SKEWS OVER 25° THRU 45°

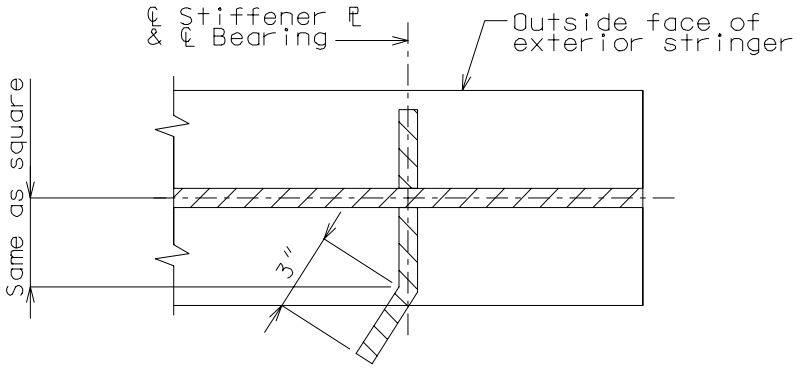

The designer shall increase the skewed plate thickness if it does not provide an area equivalent to the square plate indicated on page 1.6-1.

TYPICAL DETAIL LOCATING STIFFENER PLATE SKEWS OVER 45°

SKEWED STIFFENER SIZE (MINIMUM)						
Skew ∠	W21	W24	W27	W30	W33	W36
0°-10°	3-1/2 x 3/8	4 x 3/8	4-1/2 x 3/8	4-1/2 x 3/8	5 x 1/2	5-1/2 x 1/2
11°-20°	4 x 3/8	4 x 3/8	4-1/2 x 3/8	5 x 1/2	5-1/2 x 1/2	5-1/2 x 1/2
21°-30°	4 x 3/8	4-1/2 x 3/8	5 x 1/2	5 x 1/2	6 x 1/2	6 x 1/2
31°-40°	4-1/2 x 3/8	5 x 1/2	5-1/2 x 1/2	5-1/2 x 1/2	6-1/2 x 5/8	6-1/2 x 5/8
41°-45°	5 x 1/2	5-1/2 x 1/2	6 x 1/2	6-1/2 x 5/8	7 x 5/8	7-1/2 x 5/8

END DIAPHRAGM

BEARING STIFFENERS:

(*) SLOPE DIAPHRAGMS WHEN STRUCTURE IS SUPERELEVATED OR WHEN THE 4" MAXIMUM DEPTH IS EXCEEDED.

(**) SEE BRIDGE MANUAL EXPANSION DEVICE SECTION FOR DETAILS OF END DIAPHRAGMS ON A STRUCTURE.

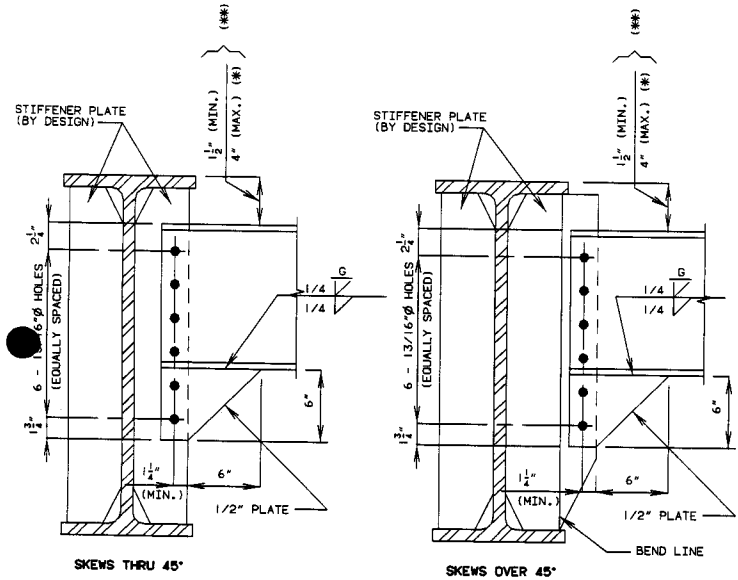

27WF THRU 36WF

NOTE TO DETAILER: END DIAPHRAGMS SHOULD BE DETAILED HORIZONTALLY, STEPPED OR SLOPED AS REQUIRED.

BEARING STIFFENERS - WELDING DETAILS

SKEWED STRUCTURES:

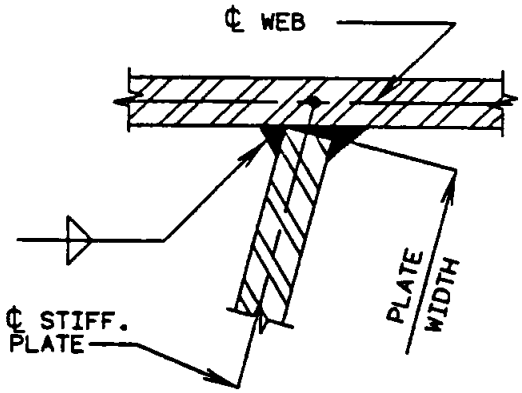

CONN. "A"

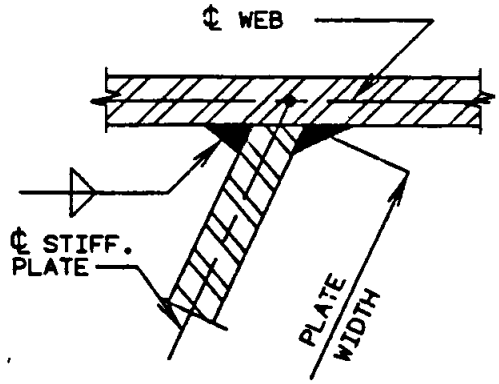

CONN. "B"

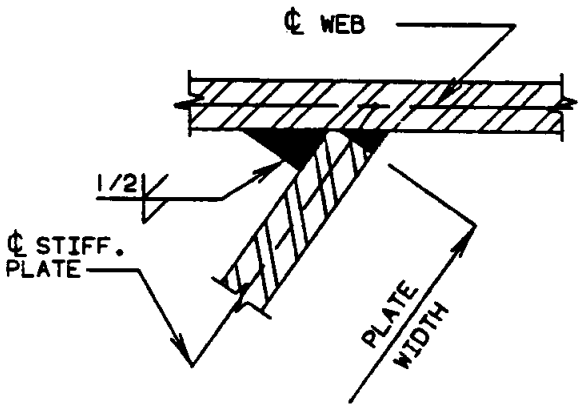

CONN. "C"

STIFFENER CONNECTION						
	STIFFENER THICKNESS					
SKEW ANGLE	3/8"	1/2"	5/8"	3/4"	7/8"	1"
0° THRU 5°	A	A	A	A	A	A
6° THRU 10°	A	A	A	A	B	B
11° THRU 15°	A	A	B	B	B	B
16° THRU 20°	A	B	B	B	B	B
21° THRU 25°	A	B	B	B	B	B
26° THRU 30°	A	B	B	B	B	B
31° THRU 35°	C	C	C	C	C	C
36° THRU 40°	C	C	C	C	C	C
41° THRU 45°	C	C	C	C	C	C

Details

BEARING STIFFENERS-END DIAPH. CONN. PLATES (FOR 21 AND 24 WIDE FLANGE ONLY)

Note to Detailer:
End diaphragms should be detailed horizontally, stepped or sloped as required.

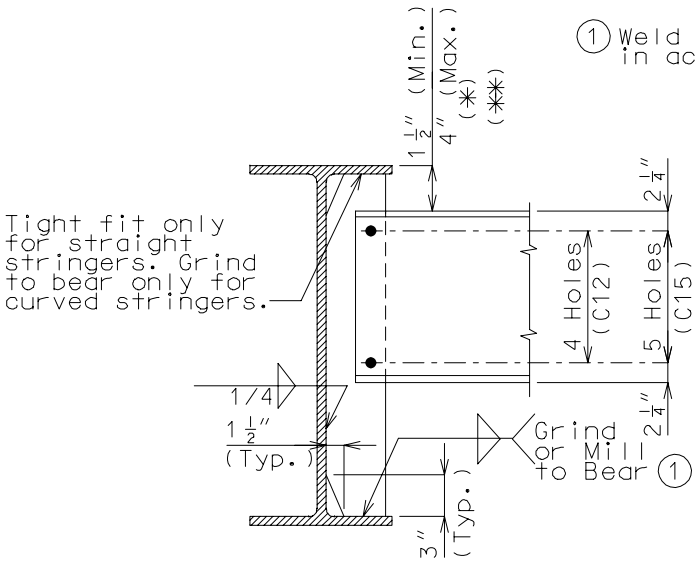

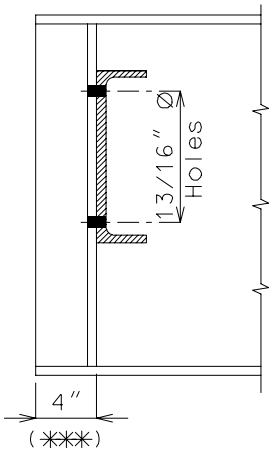

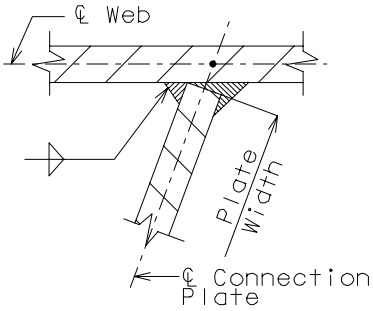

CONNECTION "A"
(SKEWS THRU 30°)

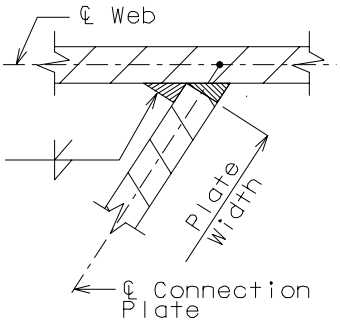

CONNECTION "D"
(SKEWS OVER 30°)

WELDING DETAILS

CONNECTION PLATE	
Skew Angle	Plate
0°	3-1/2" x 3/8"
5°	4" x 3/8"
10°	4" x 3/8"
15°	4" x 3/8"
20°	4" x 3/8"
25°	4" x 3/8"
30°	4" x 3/8"
35°	5-1/2" x 3/8"
40°	5-1/2" x 3/8"
45°	5-1/2" x 3/8"

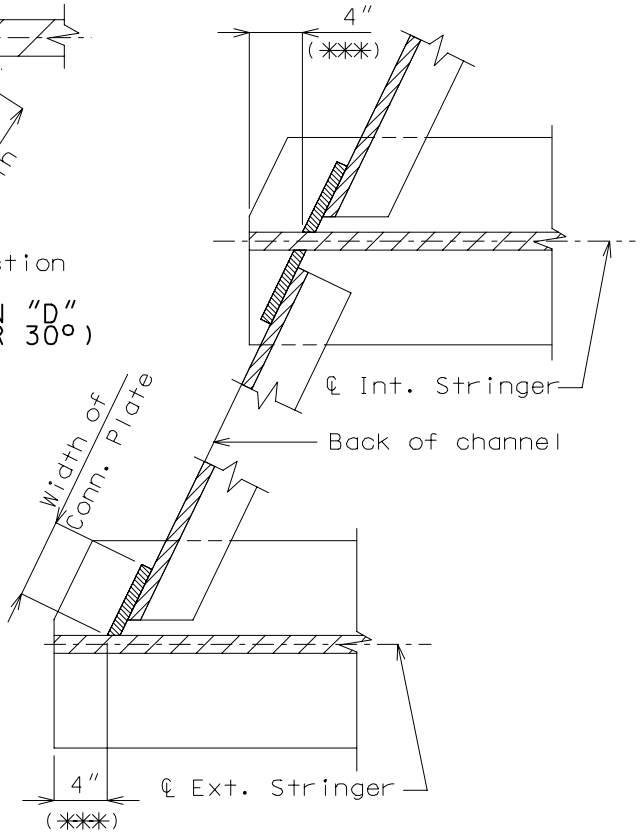

PART PLAN LOCATING END DIAPHRAGMS

(*) Slope diaphragms when structure is superelevated or when the 4" maximum depth is exceeded.

(**) See Bridge Manual Expansion Device Section for the details of end diaphragms on a structure.

(***) Modify if necessary to clear the anchor bolts of the flat plate bearing or connection bolts of the expansion device.

BEARING STIFFENERS-END DIAPH. CONN. PLATES
EXAMPLE NO. 1 (SKEW 20°)(STIFFENERS 3/8" AND 3/4")

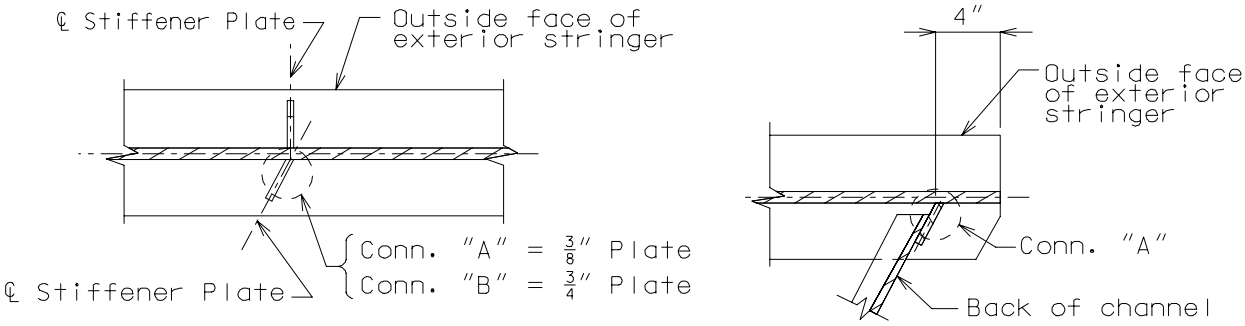

INTERMEDIATE BEARING STIFFENER CONNECTION PLATE

TYPICAL LOCATION DETAILS

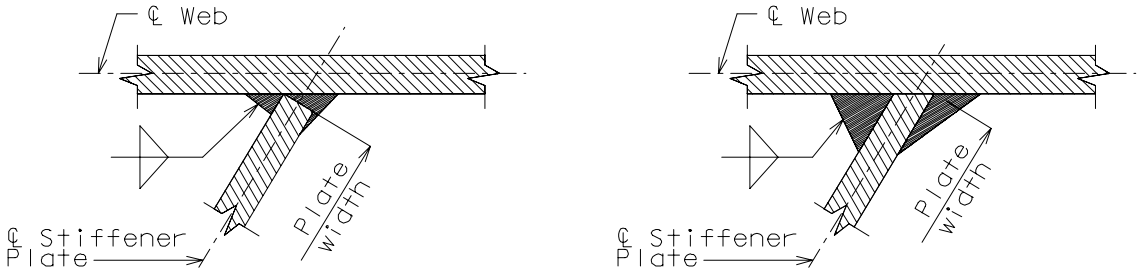

CONNECTION "A" CONNECTION "B"

WELDING DETAILS

Attention Detailer:

Show the detail on plans similar to conn. "A" for the intermediate diaphragm connection for skews thru 20°.

Try to make all connection plates for intermediate diaphragms the same size throughout the length of the bridge.

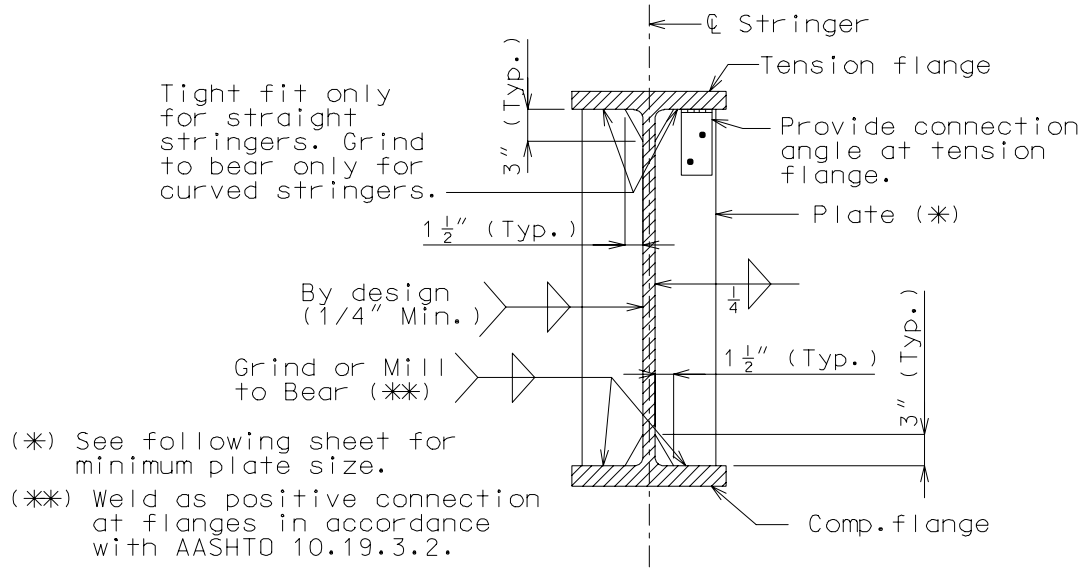

BEARING STIFFENER WITHOUT DIAPHRAGMS OR CROSS FRAMES ATTACHED

CONNECTION PLATE FOR INTERMEDIATE DIAPHRAGM OR CROSS FRAME

WELDING DETAILS

BEARING STIFFENERS-END DIAPH. CONN. PLATES
EXAMPLE NO. 2 (SKEW 34°)(STIFFENERS 1/2" AND 7/8")

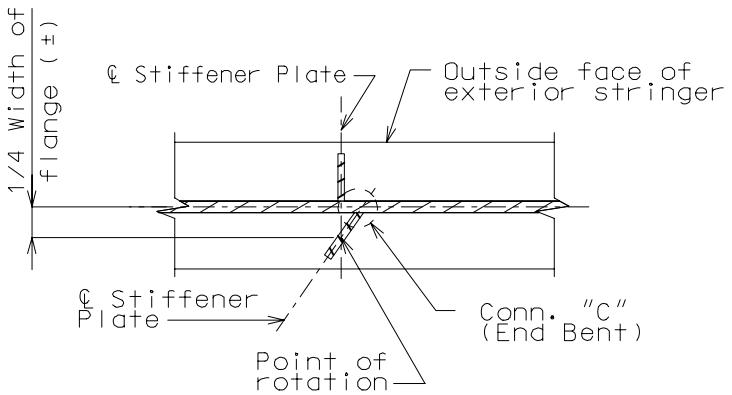

TYPICAL DETAIL LOCATION
STIFFENER PLATE AT END BENT

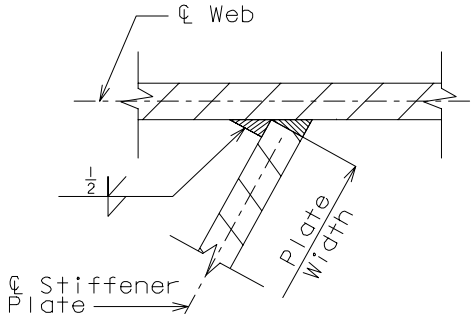

CONNECTION "C"

MINIMUM CONNECTION PLATE SIZE FOR INTERMEDIATE DIAPHRAGM			
BEAM SIZE	MINIMUM PLATE WIDTH	MINIMUM PLATE THICKNESS	
		(GRADE 36 STEEL)	(GRADE 50, 50W STEEL)
W21 X 62 Thru W21 X 93	4"	3/8"	3/8"
W24 X 68 Thru W24 X 94	4"	3/8"	3/8"
W27 X 84 Thru W27 X 114	4-1/2"	3/8"	1/2"
W30 X 99 Thru W30 X 132	4-1/2"	3/8"	1/2"
W33 X 118 Thru W33 X 152	5"	3/8"	1/2"
W36 X 135 Thru W36 X 210	5"	3/8"	1/2"

Note: Try to make connection plate for intermediate diaphrams the same size throughout the length of the bridge.

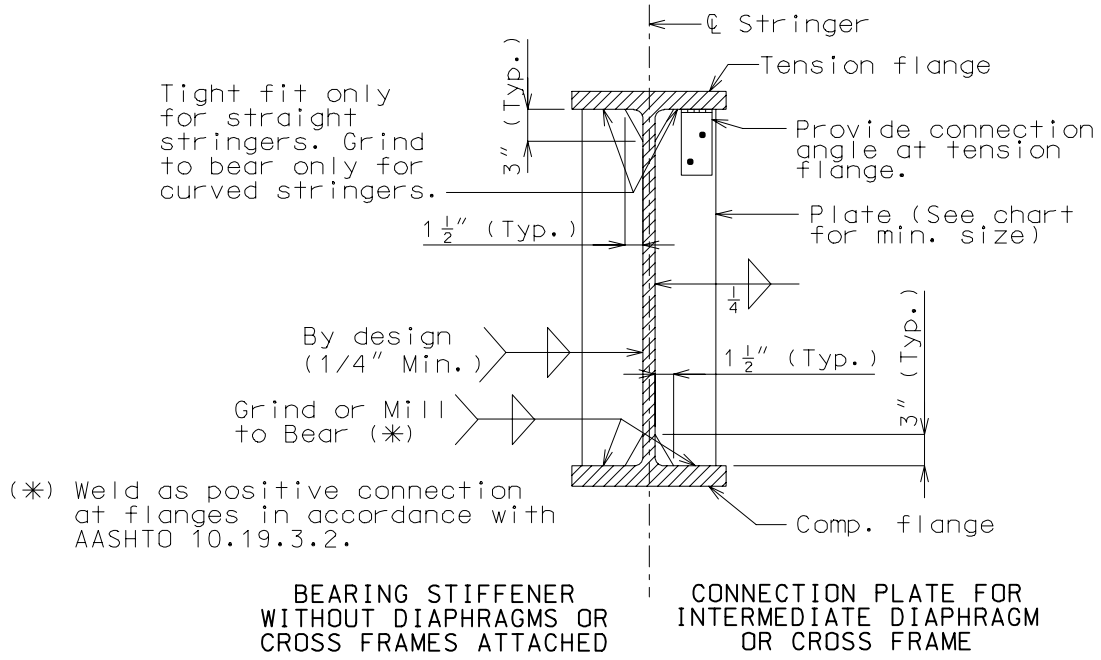

BEARING STIFFENER WITHOUT DIAPHRAGMS OR CROSS FRAMES ATTACHED

CONNECTION PLATE FOR INTERMEDIATE DIAPHRAGM OR CROSS FRAME

WELDING DETAILS

BOLTED FIELD SPLICE

STRESS IN SPLICE PLATES:

A36 STEEL WITH FS = 20,000 PSI, 7/8"Ø HIGH STRENGTH BOLTS (SHEAR BASED ON AN ALLOWABLE 21 KSI DESIGN VALUE FOR HIGH STRENGTH BOLTS. CONTACT SURFACES FOR A588 STEEL ARE TO BE BLAST CLEANED. NORMAL STEEL CONTACT SURFACES ARE TO BE PAINTED WITH INORGANIC ZINC. THE ALLOWABLE STRESS IS REDUCED TO 19 KSI IF THE THREADS FALL WITHIN THE SHEAR PLANE.) (APPLICABLE WHERE SPLICE PLATES ARE LESS THAN 5/8" THICK.)

PLACE THE FOLLOWING NOTE ON THE BRIDGE PLANS:
CONTACT SURFACES FOR A588 STEEL ARE TO BE BLAST CLEANED.

FLANGE:

DEVELOP 100% OF THE NET AREA OF SECTION SHOWN BY BOTH PLATES AND BOLTS.

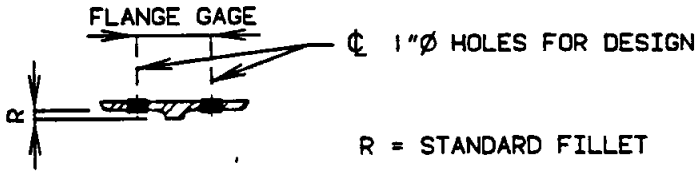

WEB:

DEVELOP 75% OF NET AREA OF WEB BY SPLICE PLATES.
A PROCEDURE SIMILAR TO THAT USED FOR PLATE GIRDER FIELD WEB SPLICES WILL BE USED TO DESIGN WEB BOLTS.

STRESS IN BEAM AT SPLICES:

A36 STEEL FS = 20,000 PSI
A572 STEEL FS = 27,000 PSI

STRESS IN THE BEAM AT SPLICES SHOULD BE INVESTIGATED ANY TIME THE SPLICE IS MOVED APPRECIABLY FROM THE POINT OF DEAD LOAD CONTRAFLEXURE. NET SECTION MODULI SHOWN BELOW MAY BE USED FOR THIS INVESTIGATION.

BEAM SIZE	NET SECTION MOD. IN³	BEAM SIZE	NET SECTION MOD. IN³	BEAM SIZE	NET SECTION MOD. IN³
W21 X 62	97.7	W27 X 94	193.3	W33 X 141	365.1
W21 X 68	108.1	W27 X 102	212.1	W33 X 152	397.7
W21 X 73	116.4	W27 X 114	238.5	W36 X 135	358.4
W21 X 83	131.7	W30 X 99	214.6	W36 X 150	411.8
W21 X 93	148.2	W30 X 108	239.0	W36 X 160	443.4
W24 X 68	119.6	W30 X 116	261.7	W36 X 170	473.8
W24 X 76	137.1	W30 X 124	283.2	W36 X 182	508.6
W24 X 84	153.4	W30 X 132	303.5	W36 X 194	543.6
W24 X 94	172.8	W33 X 118	292.1	W36 X 210	589.4
W27 X 84	168.4	W33 X 130	330.4		

NOTE: FOR BEAM SPLICES OF HEAVIER SERIES BEAMS NOT SHOWN IN THE TABLES, AN INVESTIGATION OF THE FILL PLATES AND SPECIAL DETAILS FOR THE BRIDGE PLANS ARE REQUIRED.

BOLTED FIELD SPLICES

21" WIDE FLANGE BEAMS
A36 STEEL

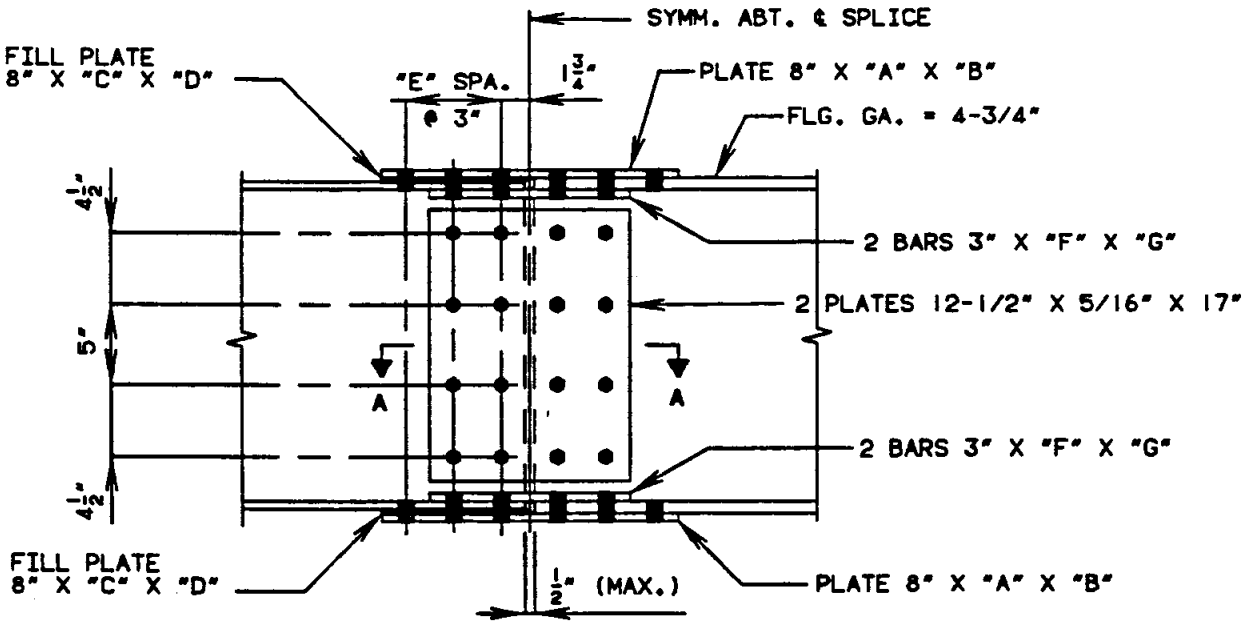

W21 X 62 THRU W21 X 93

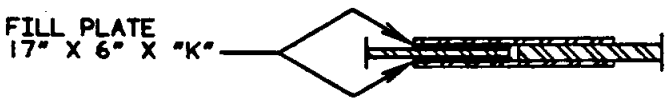

SECTION A-A

NOTE: 15/16"Ø HOLES FOR 7/8"Ø HIGH STRENGTH BOLTS.

SIZE OF BEAMS	"A"	"B"	"C"	"D"	"E"	"F"	"G"	"K"	WEIGHT(•)
W21 X 62 TO 62	3/8"	12-1/2"	—	—	1	1/2"	12-1/2"	—	110.60
W21 X 62 TO 68	3/8"	12-1/2"	15 GA.	6"	1	1/2"	12-1/2"	—	112.42
W21 X 62 TO 73	3/8"	12-1/2"	11 GA.	6"	1	1/2"	12-1/2"	—	113.85
W21 X 62 TO 83	3/8"	12-1/2"	1/4"	6"	1	1/2"	12-1/2"	—	117.40
W21 X 62 TO 93	3/8"	12-1/2"	5/16"	6"	1	1/2"	12-1/2"	13 GA.	124.29
W21 X 68 TO 68	1/2"	18-1/2"	—	—	2	1/2"	12-1/2"	—	138.89
W21 X 68 TO 73	1/2"	18-1/2"	17 GA.	9"	2	1/2"	12-1/2"	—	141.09
W21 X 68 TO 83	1/2"	18-1/2"	9 GA.	9"	2	1/2"	12-1/2"	—	145.00
W21 X 68 TO 93	1/2"	18-1/2"	1/4"	9"	2	1/2"	12-1/2"	14 GA.	153.42
W21 X 73 TO 73	1/2"	18-1/2"	—	—	2	5/8"	12-1/2"	—	144.21
W21 X 73 TO 83	1/2"	18-1/2"	13 GA.	9"	2	5/8"	12-1/2"	—	147.87
W21 X 73 TO 93	1/2"	18-1/2"	3/16"	9"	2	5/8"	12-1/2"	—	151.87
W21 X 83 TO 83	5/8"	18-1/2"	—	—	2	5/8"	12-1/2"	—	154.70
W21 X 83 TO 93	5/8"	18-1/2"	13 GA.	9"	2	5/8"	12-1/2"	—	158.37
W21 X 93 TO 93	5/8"	18-1/2"	—	—	2	3/4"	18-1/2"	—	175.33

(•) WEIGHT WITH BOLTS

BOLTED FIELD SPLICES

24" WIDE FLANGE BEAMS
A36 STEEL

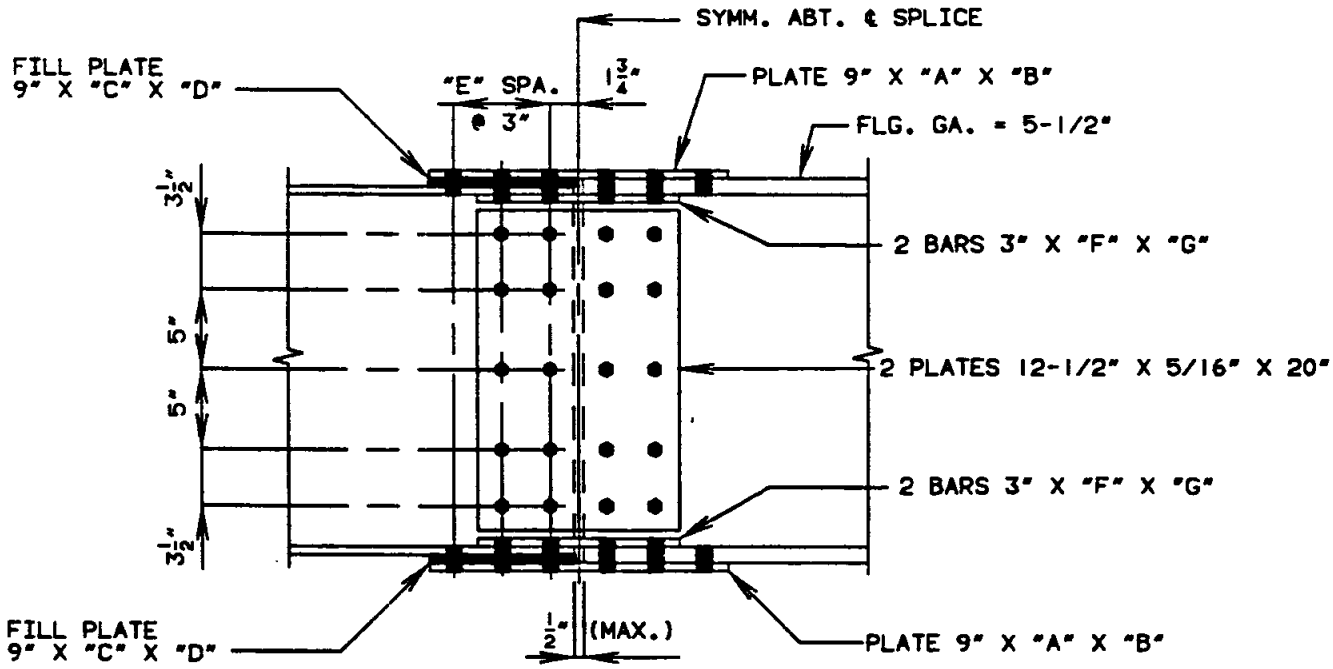

W24 X 68 THRU W24 X 94

NOTE: 15/16"Ø HOLES FOR 7/8"Ø HIGH STRENGTH BOLTS.

SIZE OF BEAMS	"A"	"B"	"C"	"D"	"E"	"F"	"G"	WEIGHT(*)
W24 X 68 TO 68	3/8"	18-1/2"	—	—	2	1/2"	12-1/2"	142.79
W24 X 68 TO 76	3/8"	18-1/2"	13 GA.	9"	2	1/2"	12-1/2"	146.91
W24 X 68 TO 84	3/8"	18-1/2"	3/16"	9"	2	1/2"	12-1/2"	151.40
W24 X 68 TO 94	3/8"	18-1/2"	5/16"	9"	2	1/2"	12-1/2"	157.14
W24 X 76 TO 76	1/2"	18-1/2"	—	—	2	1/2"	12-1/2"	154.59
W24 X 76 TO 84	1/2"	18-1/2"	13 GA.	9"	2	1/2"	12-1/2"	158.71
W24 X 76 TO 94	1/2"	18-1/2"	3/16"	9"	2	1/2"	12-1/2"	163.20
W24 X 84 TO 84	1/2"	18-1/2"	—	—	2	5/8"	18-1/2"	172.67
W24 X 84 TO 94	1/2"	18-1/2"	12 GA.	9"	2	5/8"	18-1/2"	177.47
W24 X 94 TO 94	5/8"	2'-1/2"	—	—	3	5/8"	18-1/2"	211.21

(*) WEIGHT WITH BOLTS

BOLTED FIELD SPLICES

27" WIDE FLANGE BEAMS
A36 STEEL

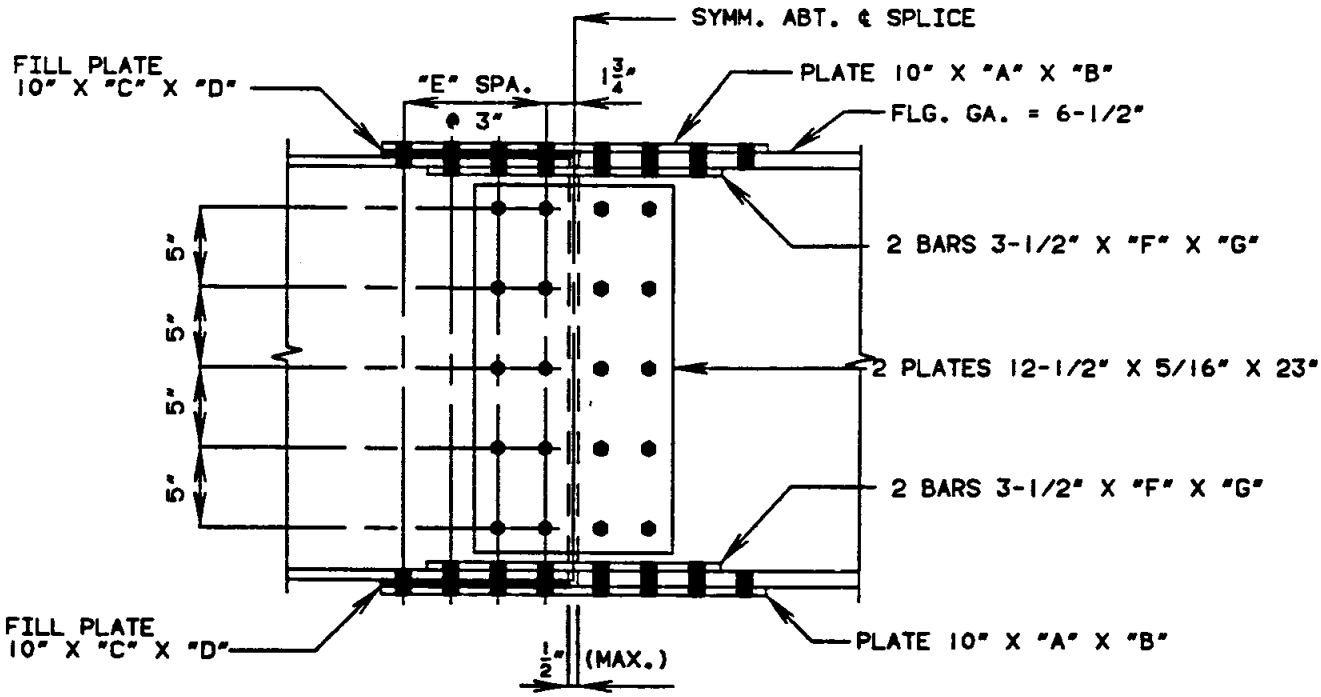

W27 X 84 THRU W27 X 114

NOTE: 15/16"Ø HOLES FOR 7/8"Ø HIGH STRENGTH BOLTS.

SIZE OF BEAMS	"A"	"B"	"C"	"D"	"E"	"F"	"G"	WEIGHT(*)
W27 X 84 TO 84	1/2"	18-1/2"	—	—	2	1/2"	12-1/2"	170.02
W27 X 84 TO 94	1/2"	18-1/2"	12 GA.	9"	2	1/2"	12-1/2"	175.36
W27 X 84 TO 102	1/2"	18-1/2"	3/16"	9"	2	1/2"	12-1/2"	179.59
W27 X 84 TO 114	1/2"	18-1/2"	5/16"	9"	2	1/2"	12-1/2"	185.97
W27 X 94 TO 94	1/2"	2'-1/2"	—	—	3	1/2"	18-1/2"	206.55
W27 X 94 TO 102	1/2"	2'-1/2"	13 GA.	12"	3	1/2"	18-1/2"	212.65
W27 X 94 TO 114	1/2"	2'-1/2"	3/16"	12"	3	1/2"	18-1/2"	219.31
W27 X 102 TO 102	1/2"	2'-1/2"	—	—	3	5/8"	18-1/2"	215.73
W27 X 102 TO 114	1/2"	2'-1/2"	12 GA.	12"	3	5/8"	18-1/2"	222.85
W27 X 114 TO 114	5/8"	2'-1/2"	—	—	3	5/8"	18-1/2"	233.10

(*) WEIGHT WITH BOLTS

BOLTED FIELD SPLICES

30" WIDE FLANGE BEAMS
A36 STEEL

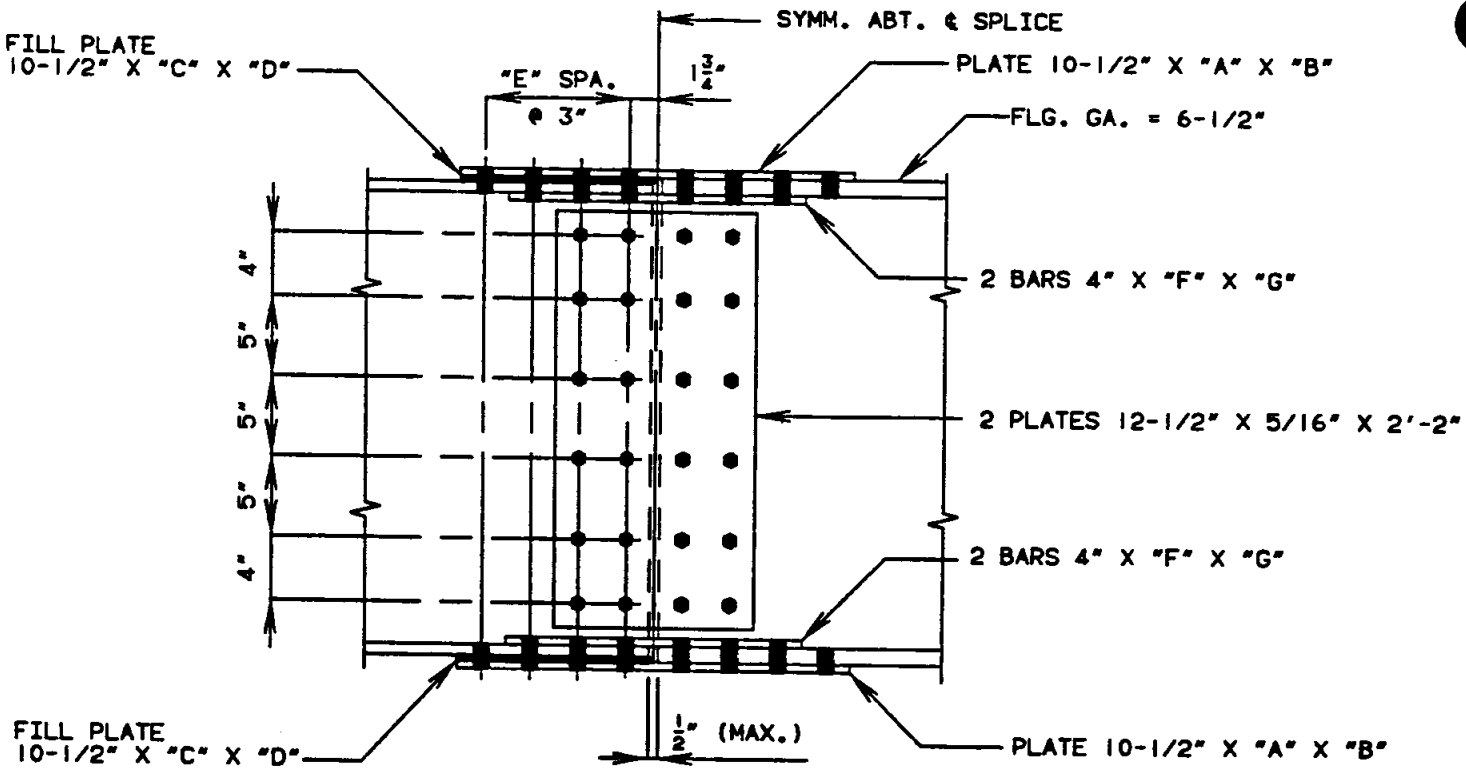

W30 X 99 THRU W30 X 132

NOTE: 15/16"Ø HOLES FOR 7/8"Ø HIGH STRENGTH BOLTS.

SIZE OF BEAMS	"A"	"B"	"C"	"D"	"E"	"F"	"G"	WEIGHT(•)
W30 X 99 TO 99	3/8"	18-1/2"	—	—	2	1/2"	18-1/2"	186.48
W30 X 99 TO 108	3/8"	18-1/2"	13 GA.	9"	2	1/2"	18-1/2"	191.28
W30 X 99 TO 116	3/8"	18-1/2"	3/16"	9"	2	1/2"	18-1/2"	196.53
W30 X 99 TO 124	3/8"	18-1/2"	1/4"	9"	2	1/2"	18-1/2"	199.87
W30 X 99 TO 132	3/8"	18-1/2"	5/16"	9"	2	1/2"	18-1/2"	203.22
W30 X 108 TO 108	1/2"	2'-1/2"	—	—	3	1/2"	18-1/2"	225.71
W30 X 108 TO 116	1/2"	2'-1/2"	13 GA.	12"	3	1/2"	18-1/2"	232.12
W30 X 108 TO 124	1/2"	2'-1/2"	8 GA.	12"	3	1/2"	18-1/2"	237.46
W30 X 108 TO 132	1/2"	2'-1/2"	1/4"	12"	3	1/2"	18-1/2"	243.58
W30 X 116 TO 116	1/2"	2'-1/2"	—	—	3	5/8"	18-1/2"	236.20
W30 X 116 TO 124	1/2"	2'-1/2"	14 GA.	12"	3	5/8"	18-1/2"	241.54
W30 X 116 TO 132	1/2"	2'-1/2"	9 GA.	12"	3	5/8"	18-1/2"	246.89
W30 X 124 TO 124	5/8"	2'-1/2"	—	—	3	5/8"	18-1/2"	254.44
W30 X 124 TO 132	5/8"	2'-1/2"	15 GA.	12"	3	5/8"	18-1/2"	259.25
W30 X 132 TO 132	5/8"	2'-1/2"	—	—	3	3/4"	2'-1/2"	285.35

(•) WEIGHT WITH BOLTS

BOLTED FIELD SPLICES

33" WIDE FLANGE BEAMS
A36 STEEL

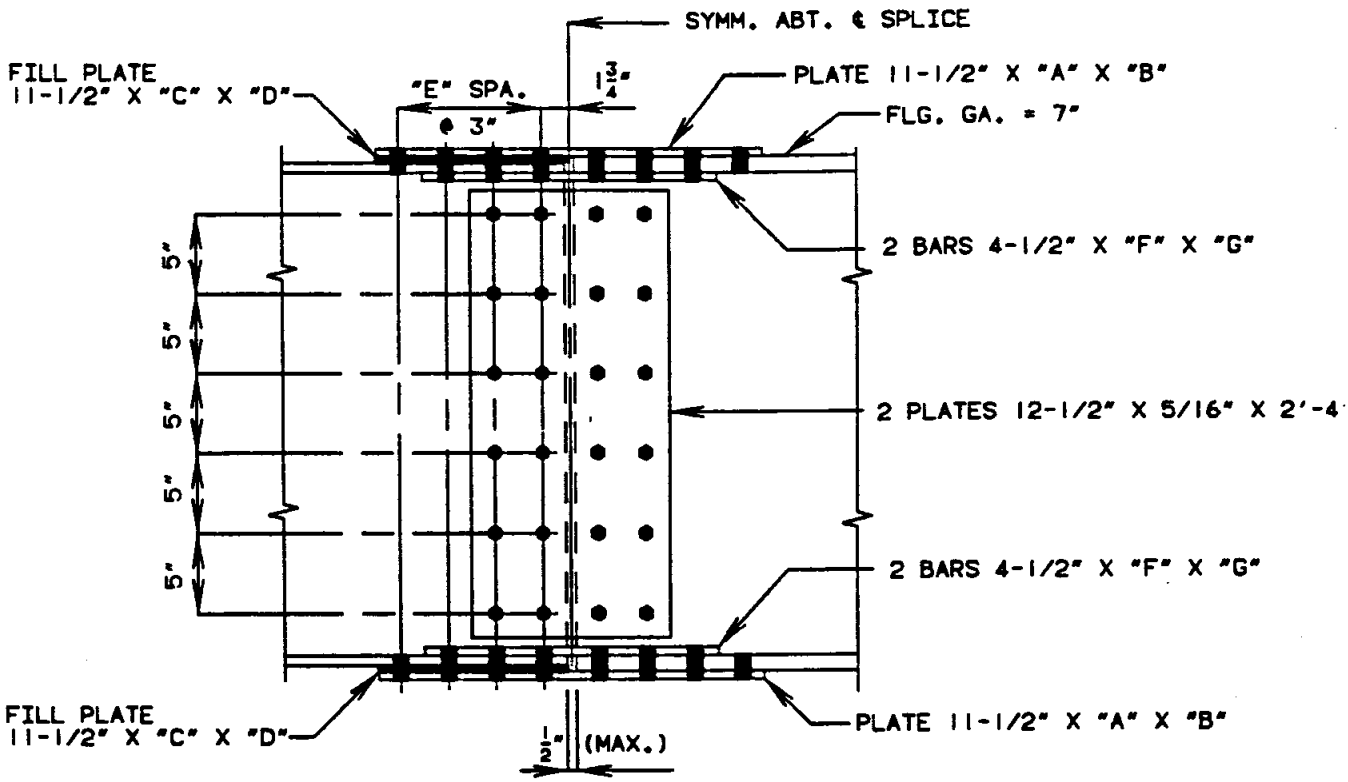

W33 X 118 THRU W33 X 152

NOTE: 15/16"Ø HOLES FOR 7/8"Ø HIGH STRENGTH BOLTS.

SIZE OF BEAMS	"A"	"B"	"C"	"D"	"E"	"F"	"G"	WEIGHT(*)
W33 X 118 TO 118	1/2"	2'-1/2"	—	—	3	1/2"	18-1/2"	242.34
W33 X 118 TO 130	1/2"	2'-1/2"	11 GA.	12"	3	1/2"	18-1/2"	251.70
W33 X 118 TO 141	1/2"	2'-1/2"	1/4"	12"	3	1/2"	18-1/2"	261.91
W33 X 118 TO 152	1/2"	2'-1/2"	5/16"	12"	3	1/2"	18-1/2"	266.80
W33 X 130 TO 130	1/2"	2'-1/2"	—	—	3	5/8"	2'-1/2"	273.28
W33 X 130 TO 141	1/2"	2'-1/2"	12 GA.	12"	3	5/8"	2'-1/2"	281.47
W33 X 130 TO 152	1/2"	2'-1/2"	3/16"	12"	3	5/8"	2'-1/2"	287.96
W33 X 141 TO 141	5/8"	2'-6 1/2"	—	—	4	5/8"	2'-1/2"	325.31
W33 X 141 TO 152	5/8"	2'-6 1/2"	13 GA.	15"	4	5/8"	2'-1/2"	334.09
W33 X 152 TO 152	5/8"	2'-6 1/2"	—	—	4	3/4"	2'-1/2"	340.95

(*) WEIGHT WITH BOLTS

BOLTED FIELD SPLICES

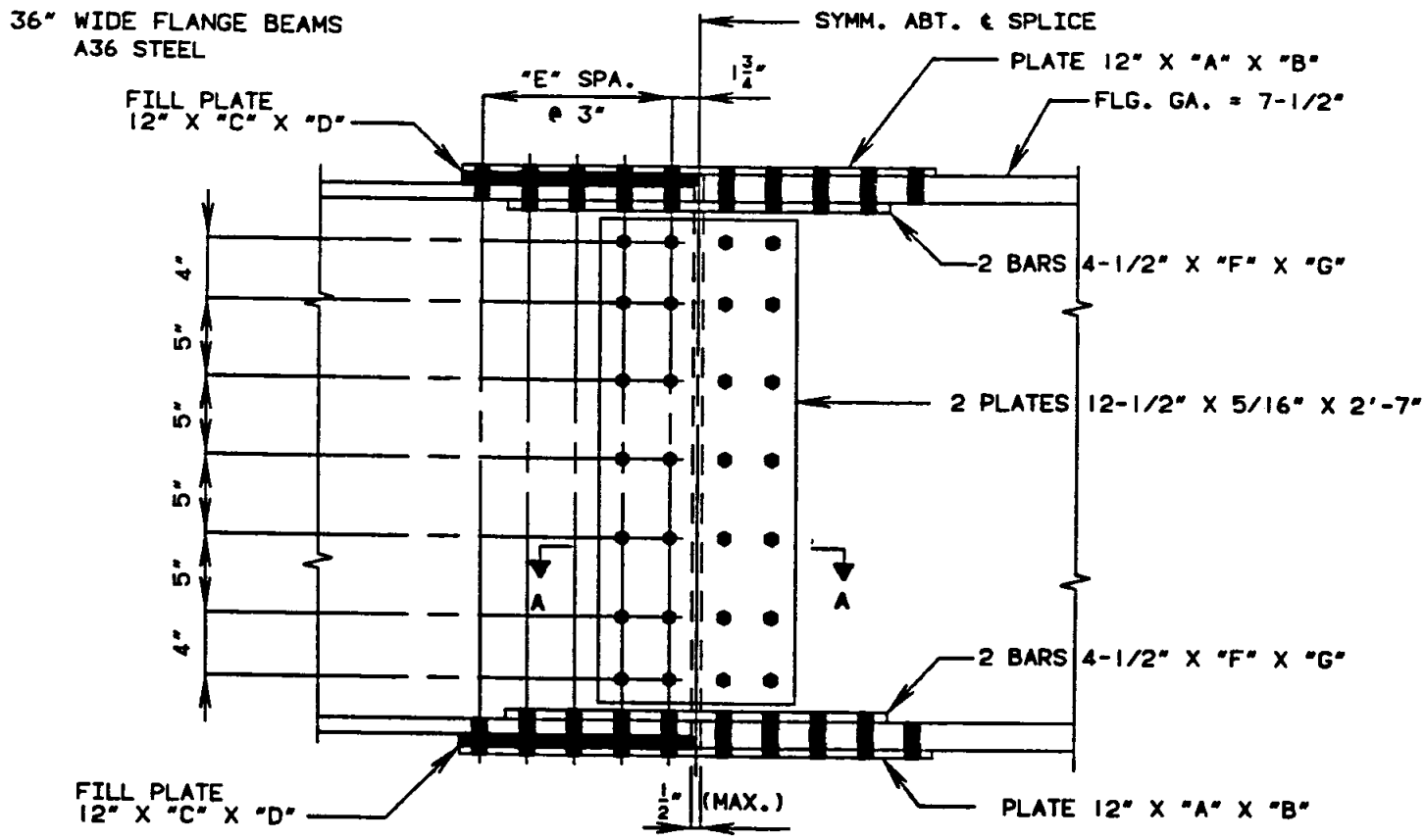

W36 X 135 THRU W36 X 170

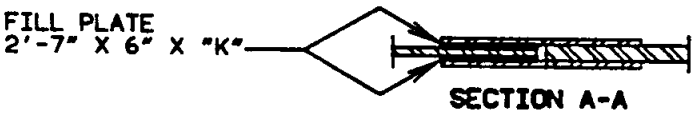

SECTION A-A

NOTE: 15/16"Ø HOLES FOR 7/8"Ø HIGH STRENGTH BOLTS.

SIZE OF BEAMS	"A"	"B"	"C"	"D"	"E"	"F"	"G"	"K"	WEIGHT(•)
W36 X 135 TO 135	1/2"	2'-1/2"	—	—	3	5/8"	2'-1/2"	—	287.20
W36 X 135 TO 150	1/2"	2'-1/2"	9 GA.	12"	3	5/8"	2'-1/2"	—	299.41
W36 X 135 TO 160	1/2"	2'-1/2"	1/4"	12"	3	5/8"	2'-1/2"	—	307.62
W36 X 135 TO 170	1/2"	2'-1/2"	5/16"	12"	3	5/8"	2'-1/2"	—	312.72
W36 X 135 TO 182	1/2"	2'-1/2"	3/8"	12"	3	5/8"	2'-1/2"	—	317.83
W36 X 135 TO 194	1/2"	2'-1/2"	1/2"	12"	3	5/8"	2'-1/2"	14 GA.	335.92
W36 X 135 TO 210	1/2"	2'-1/2"	9/16"	12"	3	5/8"	2'-1/2"	11 GA.	345.76
W36 X 150 TO 150	5/8"	2'-6 1/2"	—	—	4	5/8"	2'-1/2"	—	341.17
W36 X 150 TO 160	5/8"	2'-6 1/2"	14 GA.	15"	4	5/8"	2'-1/2"	—	348.79
W36 X 150 TO 170	5/8"	2'-6 1/2"	8 GA.	15"	4	5/8"	2'-1/2"	—	357.95
W36 X 150 TO 182	5/8"	2'-6 1/2"	1/4"	15"	4	5/8"	2'-1/2"	—	366.69
W36 X 150 TO 194	5/8"	2'-6 1/2"	5/16"	15"	4	5/8"	2'-1/2"	15 GA.	380.16
W36 X 150 TO 210	5/8"	2'-6 1/2"	7/16"	15"	4	5/8"	2'-1/2"	12 GA.	396.86
W36 X 160 TO 160	5/8"	2'-6 1/2"	—	—	4	3/4"	2'-1/2"	—	356.80
W36 X 160 TO 170	5/8"	2'-6 1/2"	14 GA.	15"	4	3/4"	2'-1/2"	—	364.42
W36 X 160 TO 182	5/8"	2'-6 1/2"	8 GA.	15"	4	3/4"	2'-1/2"	—	373.58
W36 X 160 TO 194	5/8"	2'-6 1/2"	1/4"	15"	4	3/4"	2'-1/2"	—	382.32
W36 X 160 TO 210	5/8"	2'-6 1/2"	5/16"	15"	4	3/4"	2'-1/2"	13 GA.	398.16
W36 X 170 TO 170	3/4"	3'-1/2"	—	—	5	3/4"	2'-6 1/2"	—	443.94
W36 X 170 TO 182	3/4"	3'-1/2"	14 GA.	18"	5	3/4"	2'-6 1/2"	—	453.10
W36 X 170 TO 194	3/4"	3'-1/2"	8 GA.	18"	5	3/4"	2'-6 1/2"	—	464.08
W36 X 170 TO 210	3/4"	3'-1/2"	1/4"	18"	5	3/4"	2'-6 1/2"	14 GA.	482.44

(•) WEIGHT WITH BOLTS

BOLTED FIELD SPLICES

36" WIDE FLANGE BEAMS (CONT.)
A36 STEEL

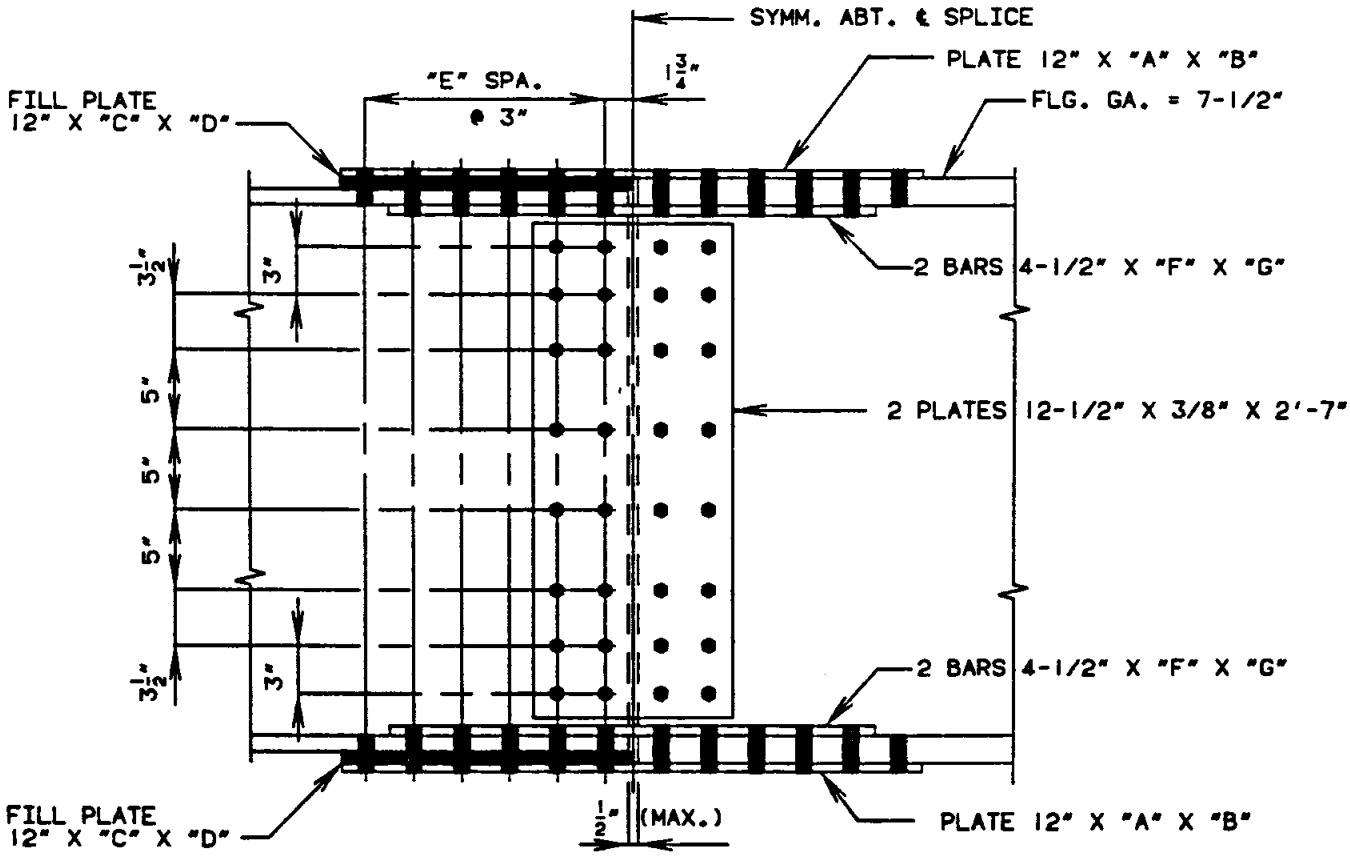

W36 X 182 THRU W36 X 210

NOTE: 15/16"Ø HOLES FOR 7/8"Ø HIGH STRENGTH BOLTS.

SIZE OF BEAMS	"A"	"B"	"C"	"D"	"E"	"F"	"G"	WEIGHT(•)
W36 X 182 TO 182	3/4"	3'-1/2"	—	—	5	3/4"	2'-6 1/2"	461.47
W36 X 182 TO 194	3/4"	3'-1/2"	14 GA.	18"	5	3/4"	2'-6 1/2"	470.62
W36 X 182 TO 210	3/4"	3'-1/2"	3/16"	18"	5	3/4"	2'-6 1/2"	484.44
W36 X 194 TO 194	3/4"	3'-1/2"	—	—	5	7/8"	2'-6 1/2"	480.93
W36 X 194 TO 210	3/4"	3'-1/2"	12 GA.	18"	5	7/8"	2'-6 1/2"	493.75
W36 X 210 TO 210	3/4"	3'-1/2"	—	—	5	1-1/8"	3'-1/2"	554.31

(•) WEIGHT WITH BOLTS

BOLTED FIELD SPLICES

21" WIDE FLANGE BEAMS
LOW ALLOY STEEL

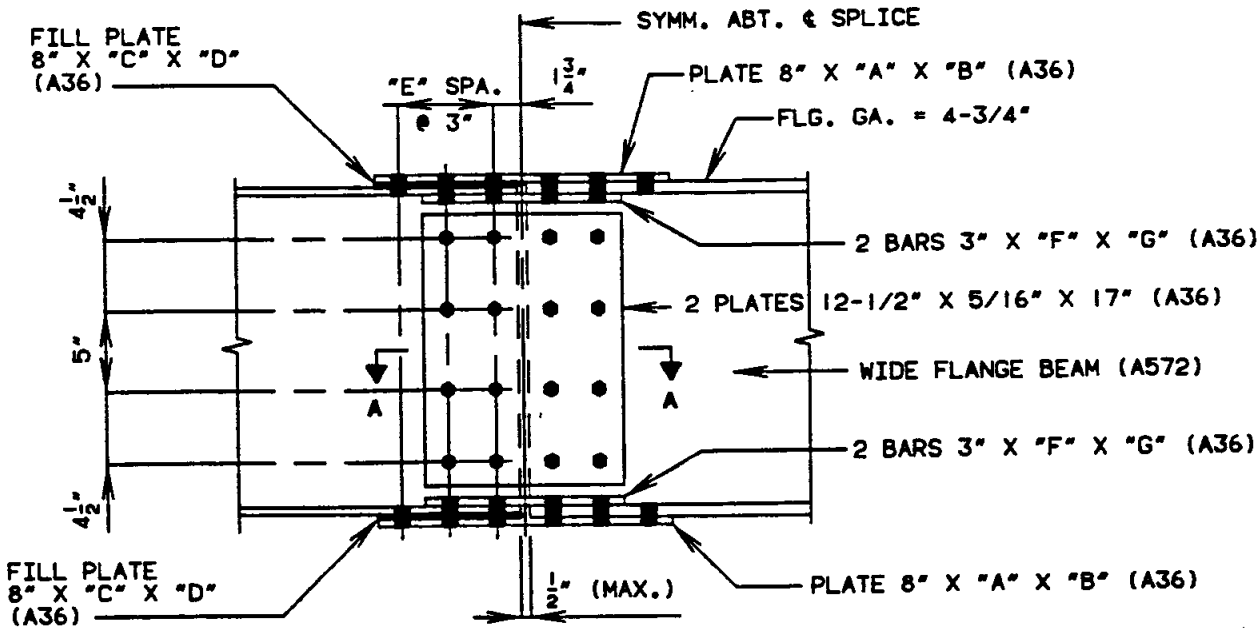

W21 X 62 THRU W21 X 73

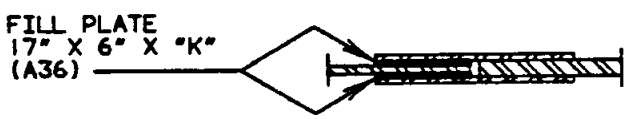

SECTION A-A

NOTE: 15/16"Ø HOLES FOR 7/8"Ø HIGH STRENGTH BOLTS.

SIZE OF BEAMS	"A"	"B"	"C"	"D"	"E"	"F"	"G"	"K"	WEIGHT(•)
W21 X 62 TO 62	5/8"	18-1/2"	—	—	2	1/2"	12-1/2"	—	149.39
W21 X 62 TO 68	5/8"	18-1/2"	15 GA.	9"	2	1/2"	12-1/2"	—	152.14
W21 X 62 TO 73	5/8"	18-1/2"	11 GA.	9"	2	1/2"	12-1/2"	—	154.27
W21 X 62 TO 83	5/8"	18-1/2"	1/4"	9"	2	1/2"	12-1/2"	—	159.60
W21 X 62 TO 93	5/8"	18-1/2"	5/16"	9"	2	1/2"	12-1/2"	13 GA.	167.34
W21 X 68 TO 68	5/8"	18-1/2"	—	—	2	3/4"	18-1/2"	—	175.34
W21 X 68 TO 73	5/8"	18-1/2"	17 GA.	9"	2	3/4"	18-1/2"	—	177.53
W21 X 68 TO 83	5/8"	18-1/2"	9 GA.	9"	2	3/4"	18-1/2"	—	181.44
W21 X 68 TO 93	5/8"	18-1/2"	1/4"	9"	2	3/4"	18-1/2"	14 GA.	189.87
W21 X 73 TO 73	3/4"	2'-1/2"	—	—	3	3/4"	18-1/2"	—	213.85
W21 X 73 TO 83	3/4"	2'-1/2"	13 GA.	12"	3	3/4"	18-1/2"	—	218.73
W21 X 73 TO 93	3/4"	2'-1/2"	3/16"	12"	3	3/4"	18-1/2"	—	224.05

(•) WEIGHT WITH BOLTS

BOLTED FIELD SPLICES

21" WIDE FLANGE BEAMS (CONT.)
LOW ALLOY STEEL

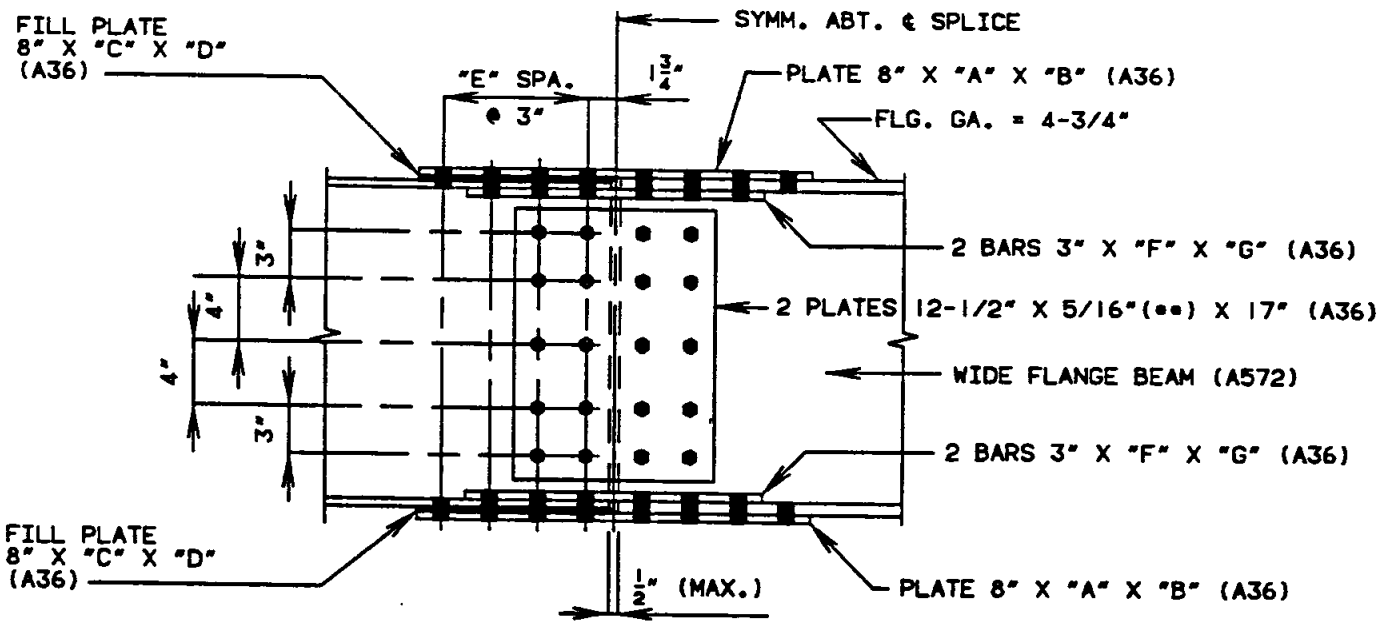

W21 X 83 THRU W21 X 93

(••) USE 3/8" FOR W21 X 93 TO W21 X 93

NOTE: 15/16"Ø HOLES FOR 7/8"Ø HIGH STRENGTH BOLTS.

SIZE OF BEAMS	"A"	"B"	"C"	"D"	"E"	"F"	"G"	WEIGHT(•)
W21 X 83 TO 83	3/4"	2'-1/2"	—	—	3	7/8"	18-1/2"	225.51
W21 X 83 TO 93	3/4"	2'-1/2"	13 GA.	12"	3	7/8"	18-1/2"	230.40
W21 X 93 TO 93	7/8"	2'-6 1/2"	—	—	4	7/8"	2'-1/2"	296.23

(•) WEIGHT WITH BOLTS

BOLTED FIELD SPLICES

24" WIDE FLANGE BEAMS
LOW ALLOY STEEL

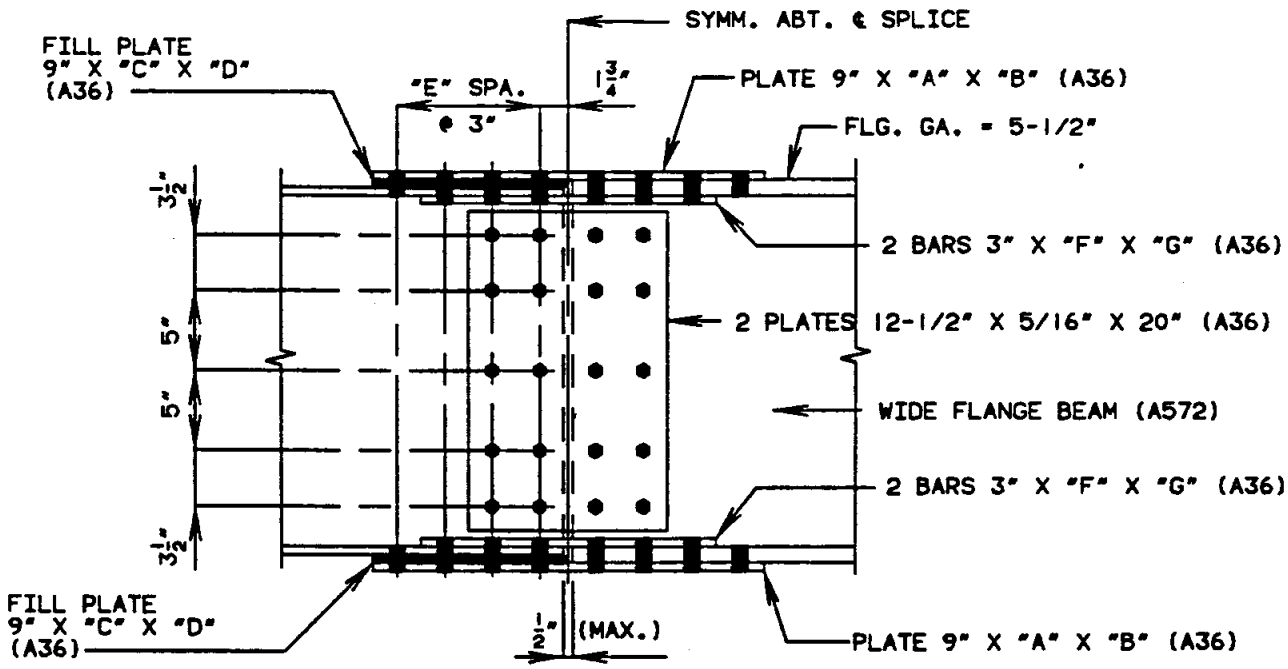

W24 X 68 THRU W24 X 94

NOTE: 15/16"Ø HOLES FOR 7/8"Ø HIGH STRENGTH BOLTS.

SIZE OF BEAMS	"A"	"B"	"C"	"D"	"E"	"F"	"G"	WEIGHT(•)
W24 X 68 TO 68	1/2"	18-1/2"	—	—	2	3/4"	18-1/2"	180.54
W24 X 68 TO 76	1/2"	18-1/2"	13 GA.	9"	2	3/4"	18-1/2"	184.66
W24 X 68 TO 84	1/2"	18-1/2"	3/16"	9"	2	3/4"	18-1/2"	189.15
W24 X 68 TO 94	1/2"	18-1/2"	5/16"	9"	2	3/4"	18-1/2"	194.89
W24 X 76 TO 76	5/8"	2'-1/2"	—	—	3	3/4"	18-1/2"	219.08
W24 X 76 TO 84	5/8"	2'-1/2"	13 GA.	12"	3	3/4"	18-1/2"	224.58
W24 X 76 TO 94	5/8"	2'-1/2"	3/16"	12"	3	3/4"	18-1/2"	230.57
W24 X 84 TO 84	3/4"	2'-1/2"	—	—	3	3/4"	18-1/2"	234.71
W24 X 84 TO 94	3/4"	2'-1/2"	12 GA.	12"	3	3/4"	18-1/2"	241.12
W24 X 94 TO 94	3/4"	2'-1/2"	—	—	3	1"	2'-1/2"	270.87

(•) WEIGHT WITH BOLTS

BOLTED FIELD SPLICES

27" WIDE FLANGE BEAMS
LOW ALLOY STEEL

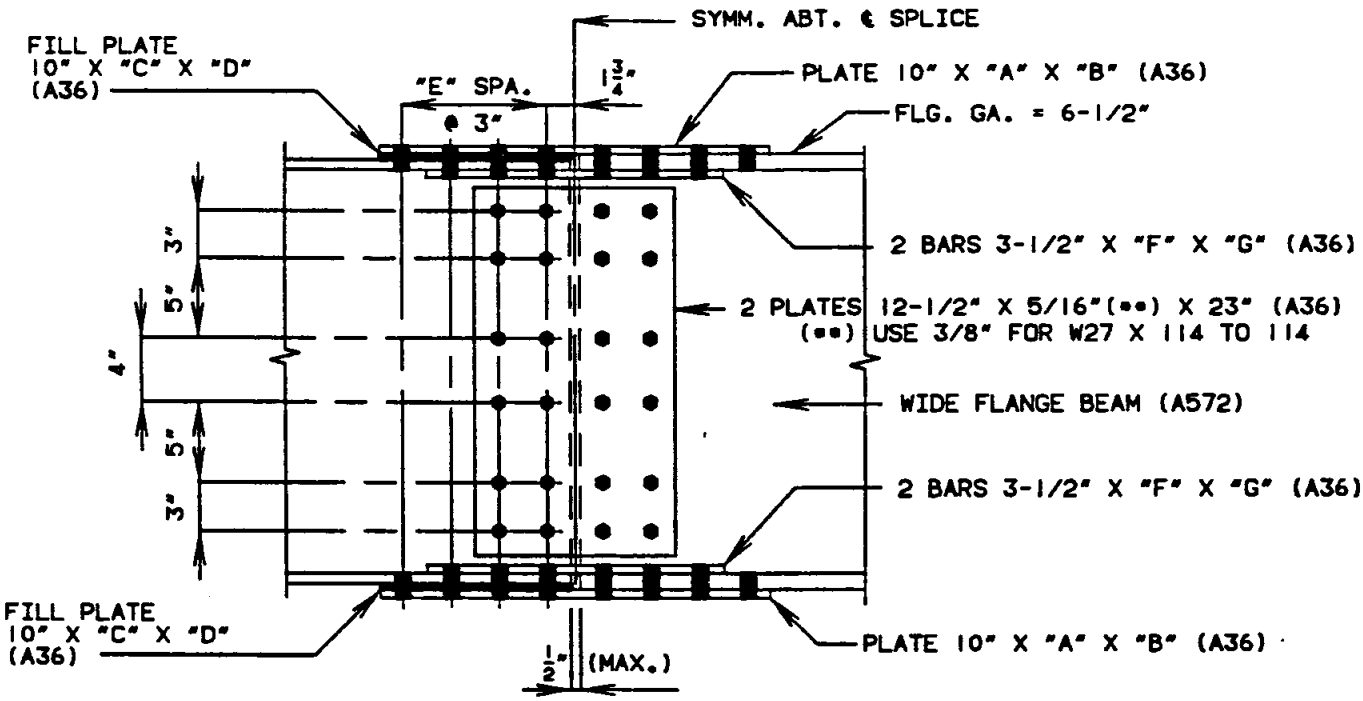

W27 X 84 THRU W27 X 114

NOTE: 15/16"Ø HOLES FOR 7/8"Ø HIGH STRENGTH BOLTS.

SIZE OF BEAMS	"A"	"B"	"C"	"D"	"E"	"F"	"G"	WEIGHT(•)
W27 X 84 TO 84	5/8"	2'-1/2"	—	—	3	5/8"	18-1/2"	236.90
W27 X 84 TO 94	5/8"	2'-1/2"	12 GA.	12"	3	5/8"	18-1/2"	244.02
W27 X 84 TO 102	5/8"	2'-1/2"	3/16"	12"	3	5/8"	18-1/2"	249.66
W27 X 84 TO 114	5/8"	2'-1/2"	5/16"	12"	3	5/8"	18-1/2"	258.17
W27 X 94 TO 94	5/8"	2'-1/2"	—	—	3	3/4"	18-1/2"	246.08
W27 X 94 TO 102	5/8"	2'-1/2"	13 GA.	12"	3	3/4"	18-1/2"	252.19
W27 X 94 TO 114	5/8"	2'-1/2"	3/16"	12"	3	3/4"	18-1/2"	258.84
W27 X 102 TO 102	3/4"	2'-6 1/2"	—	—	4	3/4"	2'-1/2"	314.43
W27 X 102 TO 114	3/4"	2'-6 1/2"	12 GA.	15"	4	3/4"	2'-1/2"	323.33
W27 X 114 TO 114	3/4"	2'-6 1/2"	—	—	4	1"	2'-1/2"	348.94

(•) WEIGHT WITH BOLTS

BOLTED FIELD SPLICES

30" WIDE FLANGE BEAMS
LOW ALLOY STEEL

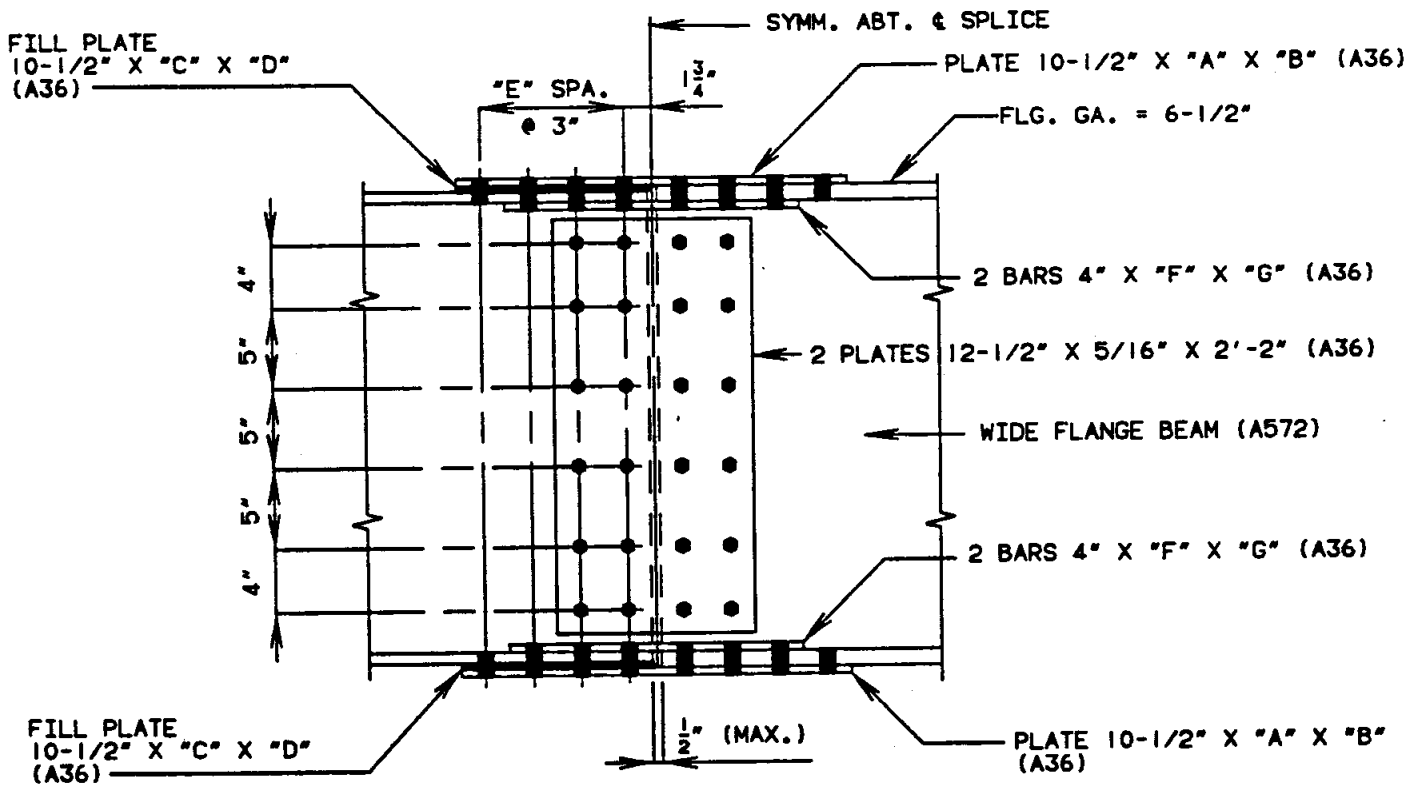

W30 X 99 THRU W30 X 116

NOTE: 15/16"Ø HOLES FOR 7/8"Ø HIGH STRENGTH BOLTS.

SIZE OF BEAMS	"A"	"B"	"C"	"D"	"E"	"F"	"G"	WEIGHT(*)
W30 X 99 TO 99	5/8"	2'-1/2"	—	—	3	5/8"	18-1/2"	254.45
W30 X 99 TO 108	5/8"	2'-1/2"	13 GA.	12"	3	5/8"	18-1/2"	260.86
W30 X 99 TO 116	5/8"	2'-1/2"	3/16"	12"	3	5/8"	18-1/2"	267.84
W30 X 99 TO 124	5/8"	2'-1/2"	1/4"	12"	3	5/8"	18-1/2"	272.31
W30 X 99 TO 132	5/8"	2'-1/2"	5/16"	12"	3	5/8"	18-1/2"	276.78
W30 X 108 TO 108	5/8"	2'-6 1/2"	—	—	4	3/4"	2'-1/2"	315.29
W30 X 108 TO 116	5/8"	2'-6 1/2"	13 GA.	15"	4	3/4"	2'-1/2"	323.30
W30 X 108 TO 124	5/8"	2'-6 1/2"	8 GA.	15"	4	3/4"	2'-1/2"	329.97
W30 X 108 TO 132	5/8"	2'-6 1/2"	1/4"	15"	4	3/4"	2'-1/2"	337.62
W30 X 116 TO 116	3/4"	2'-6 1/2"	—	—	4	3/4"	2'-1/2"	337.99
W30 X 116 TO 124	3/4"	2'-6 1/2"	14 GA.	15"	4	3/4"	2'-1/2"	344.66
W30 X 116 TO 132	3/4"	2'-6 1/2"	9 GA.	15"	4	3/4"	2'-1/2"	351.34

(*) WEIGHT WITH BOLTS

BOLTED FIELD SPLICES

30" WIDE FLANGE BEAMS (CONT.)
LOW ALLOY STEEL

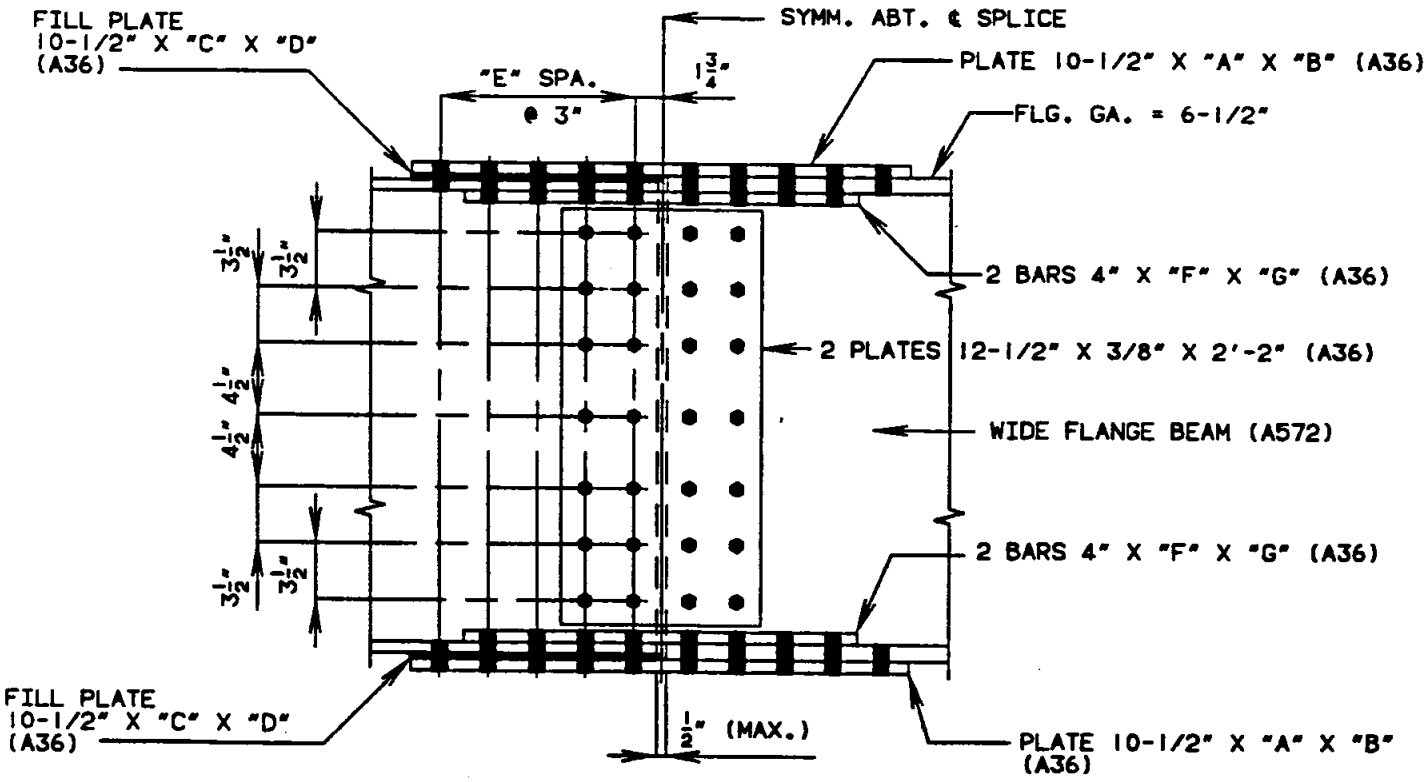

W30 X 124 THRU W30 X 132

NOTE: 15/16"Ø HOLES FOR 7/8"Ø HIGH STRENGTH BOLTS.

SIZE OF BEAMS	"A"	"B"	"C"	"D"	"E"	"F"	"G"	WEIGHT(*)
W30 X 124 TO 124	3/4"	2'-6 1/2"	—	—	4	7/8"	2'-6 1/2"	391.02
W30 X 124 TO 132	3/4"	2'-6 1/2"	15 GA.	15"	4	7/8"	2'-6 1/2"	397.03
W30 X 132 TO 132	7/8"	3'-1/2"	—	—	5	7/8"	2'-6 1/2"	452.58

(*) WEIGHT WITH BOLTS

BOLTED FIELD SPLICES

33" WIDE FLANGE BEAMS
LOW ALLOY STEEL

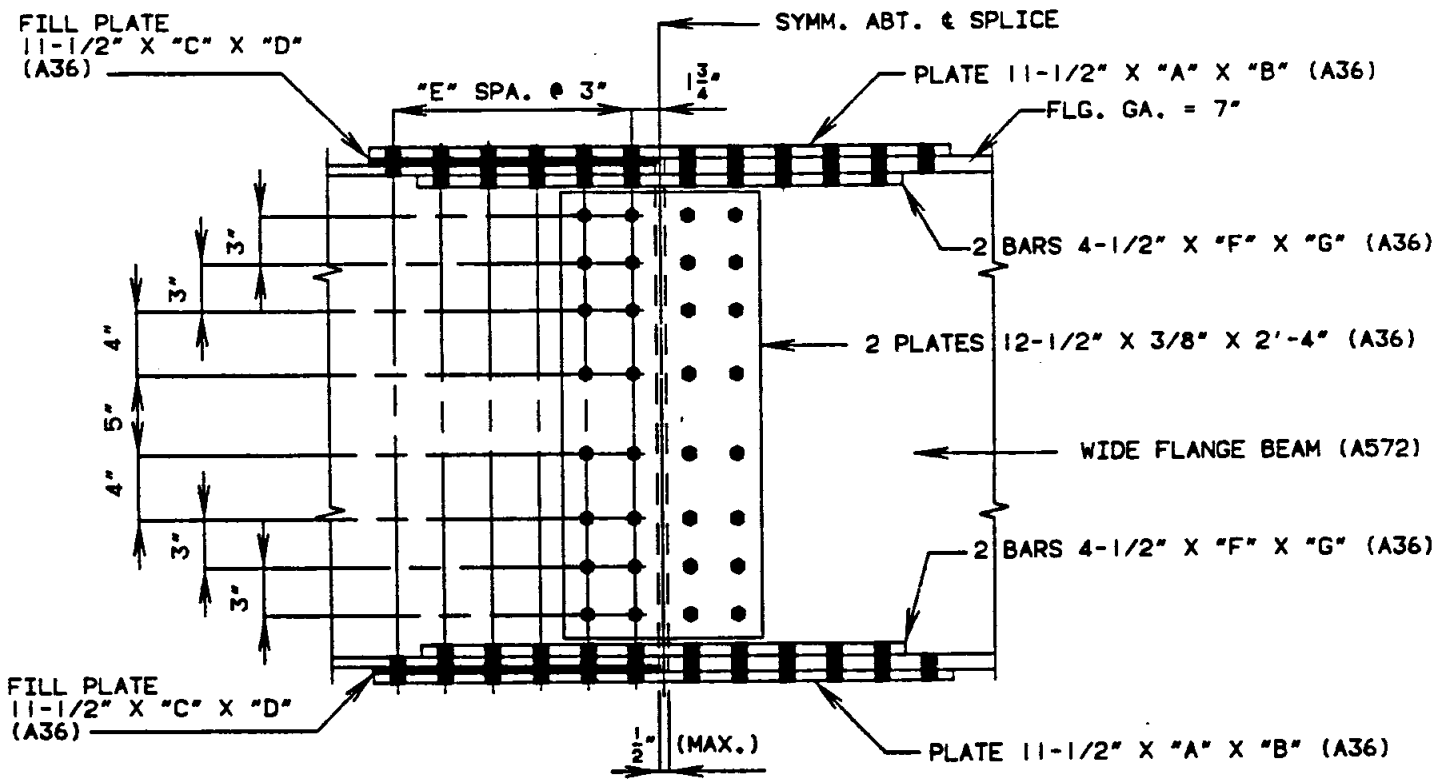

W33 X 118 THRU W33 X 152

NOTE: 15/16"Ø HOLES FOR 7/8"Ø HIGH STRENGTH BOLTS.

SIZE OF BEAMS	"A"	"B"	"C"	"D"	"E"	"F"	"G"	WEIGHT(*)
W33 X 118 TO 118	5/8"	2'-6 1/2"	—	—	4	5/8"	2'-1/2"	345.32
W33 X 118 TO 130	5/8"	2'-6 1/2"	11 GA.	15"	4	5/8"	2'-1/2"	357.02
W33 X 118 TO 141	5/8"	2'-6 1/2"	1/4"	15"	4	5/8"	2'-1/2"	369.78
W33 X 118 TO 152	5/8"	2'-6 1/2"	5/16"	15"	4	5/8"	2'-1/2"	375.89
W33 X 130 TO 130	3/4"	3'-1/2"	—	—	5	3/4"	2'-6 1/2"	445.74
W33 X 130 TO 141	3/4"	3'-1/2"	12 GA.	18"	5	3/4"	2'-6 1/2"	458.02
W33 X 130 TO 152	3/4"	3'-1/2"	3/16"	18"	5	3/4"	2'-6 1/2"	467.75
W33 X 141 TO 141	3/4"	3'-1/2"	—	—	5	7/8"	2'-6 1/2"	465.20
W33 X 141 TO 152	3/4"	3'-1/2"	13 GA.	18"	5	7/8"	2'-6 1/2"	475.73
W33 X 152 TO 152	7/8"	3'-6 1/2"	—	—	6	1"	3'-1/2"	586.88

(*) WEIGHT WITH BOLTS

BOLTED FIELD SPLICES

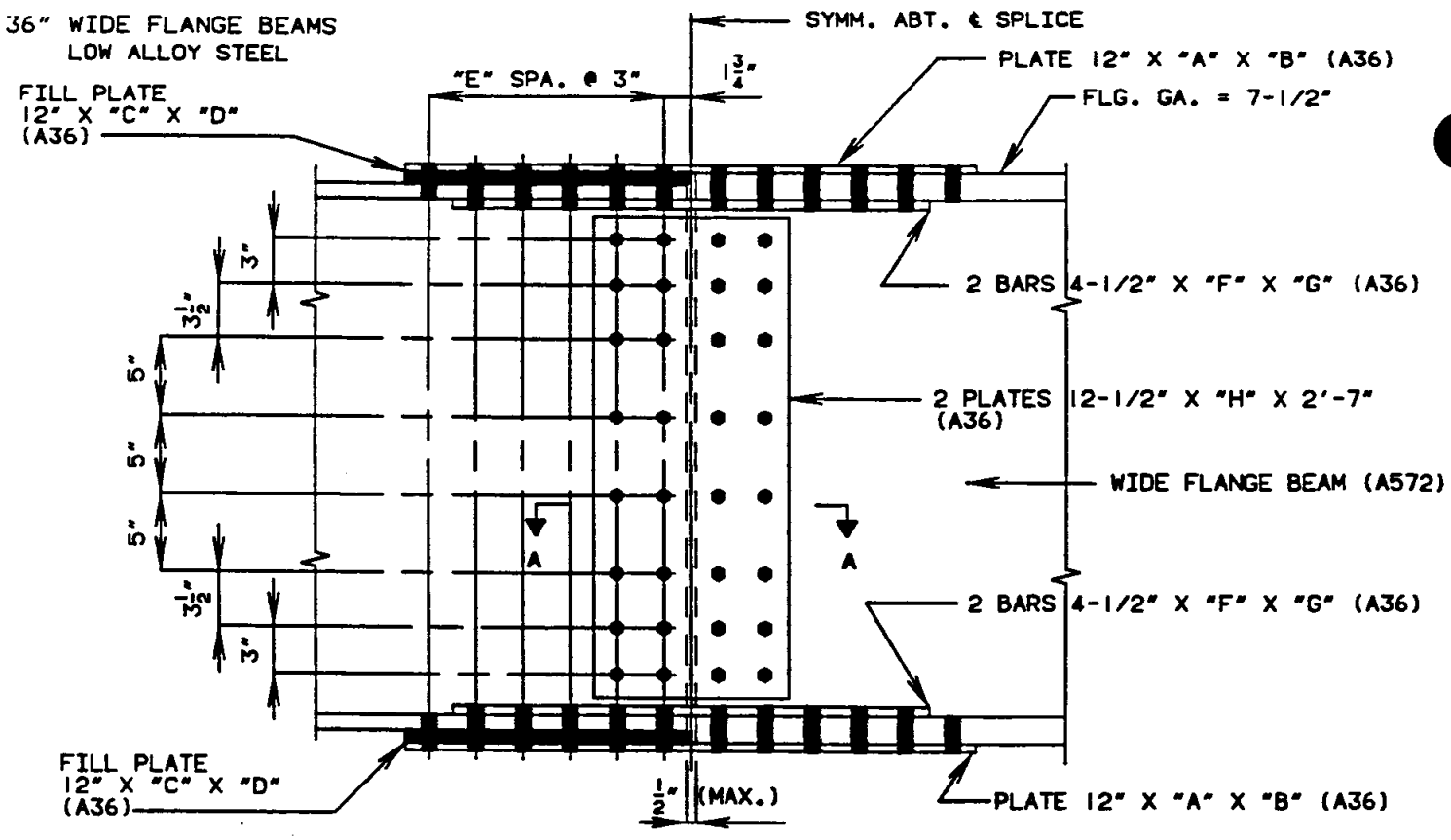

W36 X 135 THRU W36 X 170

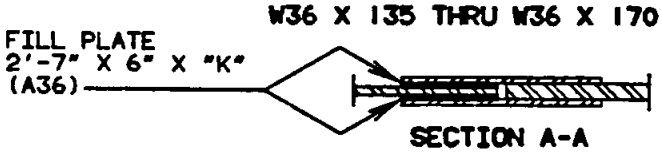

SECTION A-A

NOTE: 15/16"Ø HOLES FOR 7/8"Ø HIGH STRENGTH BOLTS.

SIZE OF BEAMS	"A"	"B"	"C"	"D"	"E"	"F"	"G"	"H"	"K"	WEIGHT(*)
W36 X 135 TO 135	3/4"	3'-1/2"	—	—	5	3/4"	2'-6 1/2"	3/8"	—	461.47
W36 X 135 TO 150	3/4"	3'-1/2"	9 GA.	18"	5	3/4"	2'-6 1/2"	3/8"	—	479.79
W36 X 135 TO 160	3/4"	3'-1/2"	1/4"	18"	5	3/4"	2'-6 1/2"	3/8"	—	492.10
W36 X 135 TO 170	3/4"	3'-1/2"	5/16"	18"	5	3/4"	2'-6 1/2"	3/8"	—	499.76
W36 X 135 TO 182	3/4"	3'-1/2"	3/8"	18"	5	3/4"	2'-6 1/2"	3/8"	—	507.41
W36 X 135 TO 194	3/4"	3'-1/2"	1/2"	18"	5	3/4"	2'-6 1/2"	3/8"	14 GA.	530.60
W36 X 135 TO 210	3/4"	3'-1/2"	9/16"	18"	5	3/4"	2'-6 1/2"	3/8"	11 GA.	543.00
W36 X 150 TO 150	3/4"	3'-1/2"	—	—	5	7/8"	2'-6 1/2"	3/8"	—	480.93
W36 X 150 TO 160	3/4"	3'-1/2"	14 GA.	18"	5	7/8"	2'-6 1/2"	3/8"	—	490.08
W36 X 150 TO 170	3/4"	3'-1/2"	8 GA.	18"	5	7/8"	2'-6 1/2"	3/8"	—	501.07
W36 X 150 TO 182	3/4"	3'-1/2"	1/4"	18"	5	7/8"	2'-6 1/2"	3/8"	—	511.56
W36 X 150 TO 194	3/4"	3'-1/2"	5/16"	18"	5	7/8"	2'-6 1/2"	3/8"	15 GA.	526.31
W36 X 150 TO 210	3/4"	3'-1/2"	7/16"	18"	5	7/8"	2'-6 1/2"	3/8"	12 GA.	534.53
W36 X 160 TO 160	7/8"	3'-6 1/2"	—	—	6	7/8"	3'-1/2"	3/8"	—	582.11
W36 X 160 TO 170	7/8"	3'-6 1/2"	14 GA.	21"	6	7/8"	3'-1/2"	3/8"	—	592.79
W36 X 160 TO 182	7/8"	3'-6 1/2"	8 GA.	21"	6	7/8"	3'-1/2"	3/8"	—	605.61
W36 X 160 TO 194	7/8"	3'-6 1/2"	1/4"	21"	6	7/8"	3'-1/2"	3/8"	—	617.84
W36 X 160 TO 210	7/8"	3'-6 1/2"	5/16"	21"	6	7/8"	3'-1/2"	3/8"	13 GA.	636.23
W36 X 170 TO 170	7/8"	3'-6 1/2"	—	—	6	1-1/8"	3'-1/2"	7/16"	—	642.42
W36 X 170 TO 182	7/8"	3'-6 1/2"	14 GA.	21"	6	1-1/8"	3'-1/2"	7/16"	—	653.10
W36 X 170 TO 194	7/8"	3'-6 1/2"	8 GA.	21"	6	1-1/8"	3'-1/2"	7/16"	—	665.92
W36 X 170 TO 210	7/8"	3'-6 1/2"	1/4"	21"	6	1-1/8"	3'-1/2"	7/16"	14 GA.	686.03

(*) WEIGHT WITH BOLTS

BOLTED FIELD SPLICES

36" WIDE FLANGE BEAMS (CONT.)
LOW ALLOY STEEL

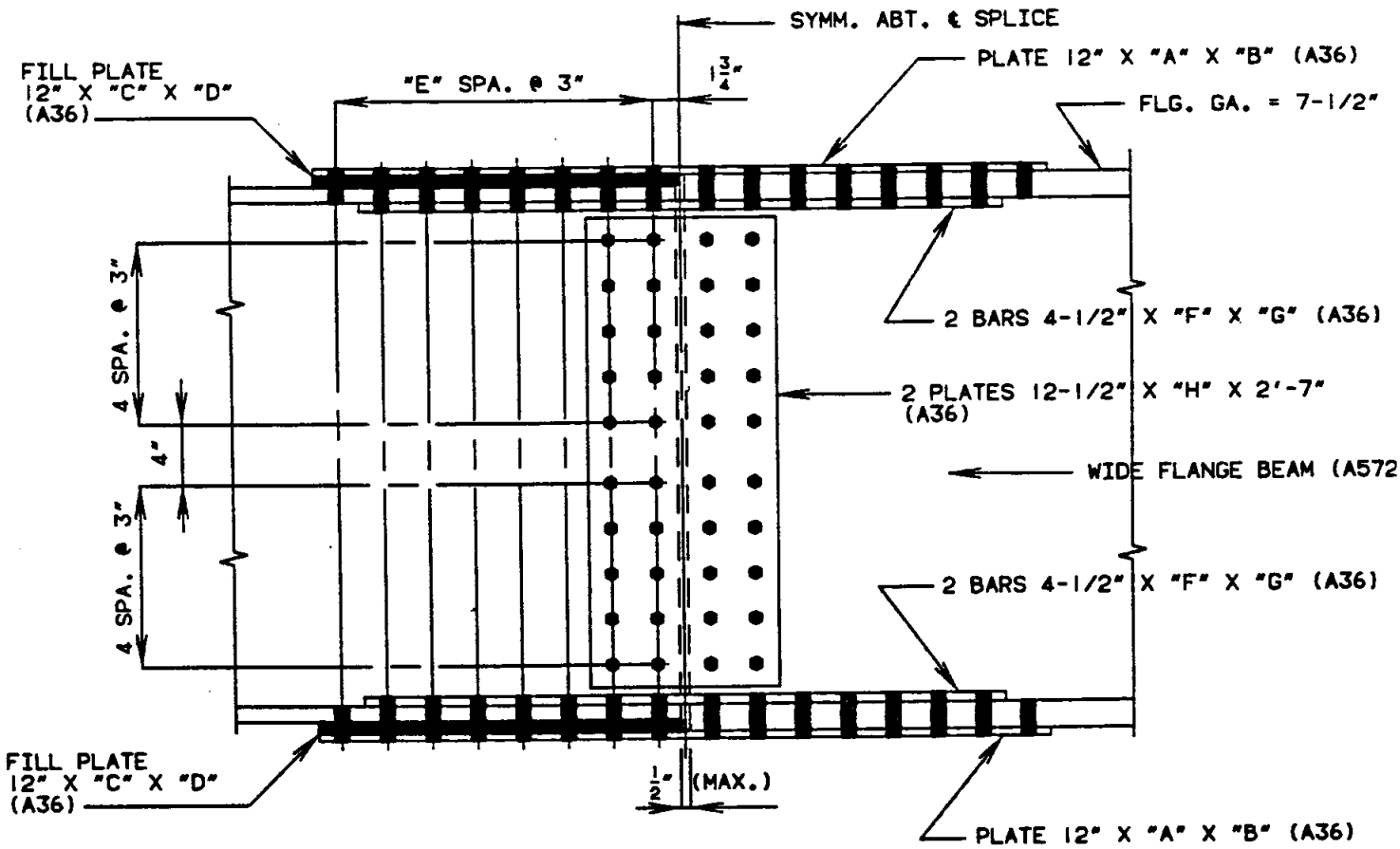

W36 X 182 THRU W36 X 210

NOTE: 15/16"Ø HOLES FOR 7/8"Ø HIGH STRENGTH BOLTS.

SIZE OF BEAMS	"A"	"B"	"C"	"D"	"E"	"F"	"G"	"H"	WEIGHT(•)
W36 X 182 TO 182	1"	4'-1/2"	—	—	7	1-1/8"	3'-6 1/2"	7/16"	769.06
W36 X 182 TO 194	1"	4'-1/2"	14 GA.	24"	7	1-1/8"	3'-6 1/2"	7/16"	781.26
W36 X 182 TO 210	1"	4'-1/2"	3/16"	24"	7	1-1/8"	3'-6 1/2"	7/16"	799.69
W36 X 194 TO 194	1"	4'-1/2"	—	—	7	1-1/4"	3'-6 1/2"	7/16"	796.18
W36 X 194 TO 210	1"	4'-1/2"	12 GA.	24"	7	1-1/4"	3'-6 1/2"	7/16"	813.26
W36 X 210 TO 210	1-1/8"	4'-6 1/2"	—	—	8	1-1/4"	4'-1/2"	1/2"	942.71

(•) WEIGHT WITH BOLTS

BOLTED FIELD SPLICES

21" WIDE FLANGE BEAMS
LOW ALLOY STEEL
(BEAMS AND SPLICE PLATES)

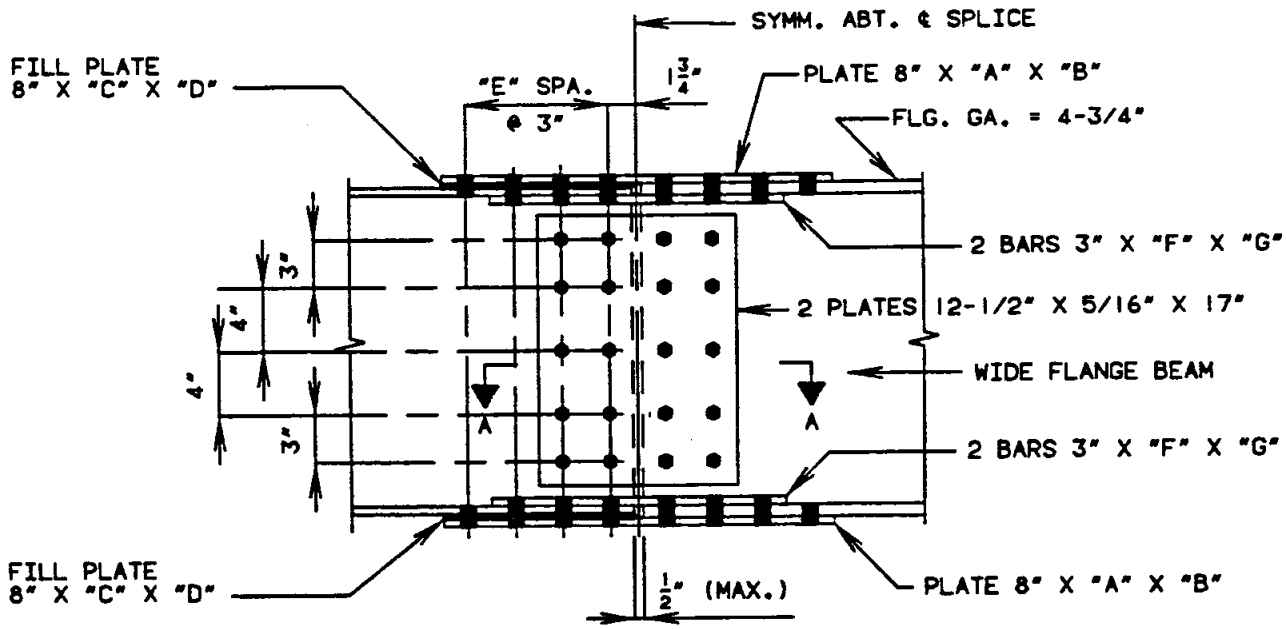

W21 X 62 THRU W21 X 93

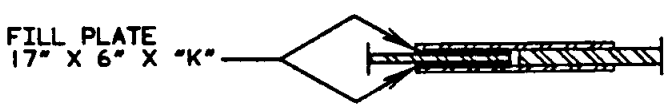

SECTION A-A

NOTE: 15/16"Ø HOLES FOR 7/8"Ø HIGH STRENGTH BOLTS.

SIZE OF BEAMS	"A"	"B"	"C"	"D"	"E"	"F"	"G"	"K"	WEIGHT(•)
W21 X 62 TO 62	3/8"	18-1/2"	—	—	2	1/2"	18-1/2"	—	142.41
W21 X 62 TO 68	3/8"	18-1/2"	15 GA.	9"	2	1/2"	18-1/2"	—	145.16
W21 X 62 TO 73	3/8"	18-1/2"	11 GA.	9"	2	1/2"	18-1/2"	—	147.30
W21 X 62 TO 83	3/8"	18-1/2"	1/4"	9"	2	1/2"	18-1/2"	—	152.62
W21 X 62 TO 93	3/8"	18-1/2"	5/16"	9"	2	1/2"	18-1/2"	13 GA.	160.36
W21 X 68 TO 68	1/2"	2'-1/2"	—	—	3	1/2"	18-1/2"	—	174.12
W21 X 68 TO 73	1/2"	2'-1/2"	17 GA.	12"	3	1/2"	18-1/2"	—	177.04
W21 X 68 TO 83	1/2"	2'-1/2"	9 GA.	12"	3	1/2"	18-1/2"	—	182.26
W21 X 68 TO 93	1/2"	2'-1/2"	1/4"	12"	3	1/2"	18-1/2"	14 GA.	192.05
W21 X 73 TO 73	1/2"	2'-1/2"	—	—	3	5/8"	18-1/2"	—	181.99
W21 X 73 TO 83	1/2"	2'-1/2"	13 GA.	12"	3	5/8"	18-1/2"	—	186.87
W21 X 73 TO 93	1/2"	2'-1/2"	3/16"	12"	3	5/8"	18-1/2"	—	192.20
W21 X 83 TO 83	5/8"	2'-1/2"	—	—	3	5/8"	18-1/2"	—	195.88
W21 X 83 TO 93	5/8"	2'-1/2"	13 GA.	12"	3	5/8"	18-1/2"	—	200.77
W21 X 93 TO 93	5/8"	2'-1/2"	—	—	3	3/4"	2'-1/2"	—	219.06

(•) WEIGHT WITH BOLTS

BOLTED FIELD SPLICES

24" WIDE FLANGE BEAMS
LOW ALLOY STEEL
(BEAMS AND SPLICE PLATES)

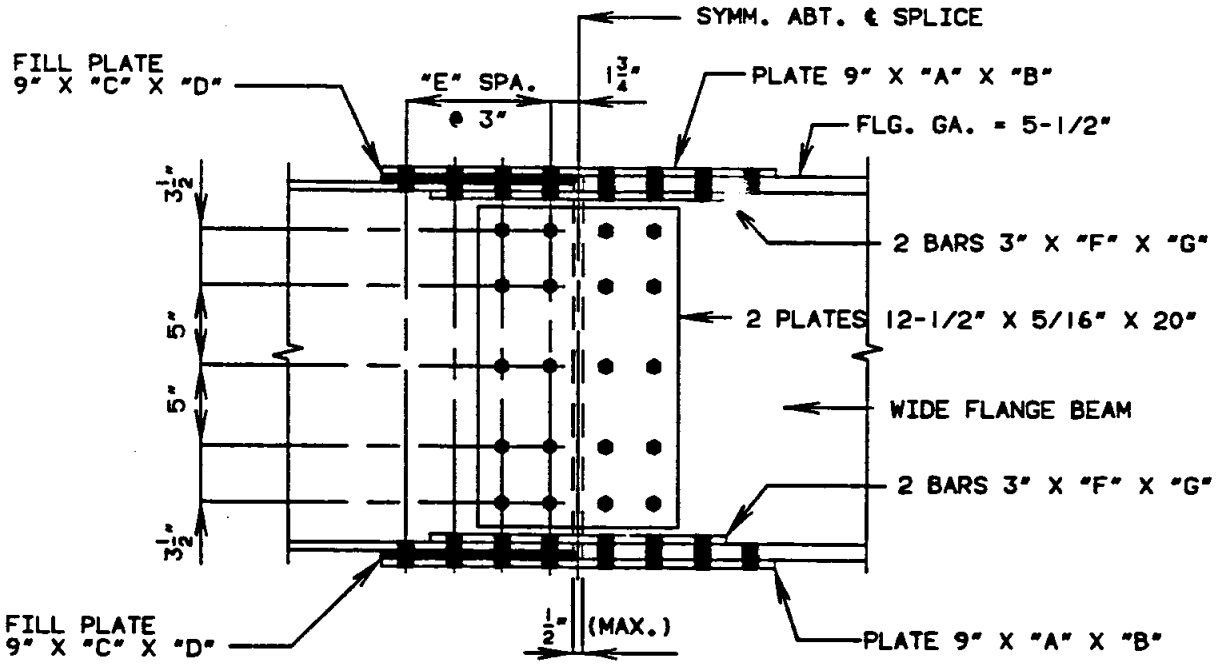

W24 X 68 THRU W24 X 94

NOTE: 15/16"Ø HOLES FOR 7/8"Ø HIGH STRENGTH BOLTS.

SIZE OF BEAMS	"A"	"B"	"C"	"D"	"E"	"F"	"G"	WEIGHT(*)
W24 X 68 TO 68	3/8"	18-1/2"	—	—	2	1/2"	18-1/2"	153.00
W24 X 68 TO 76	3/8"	18-1/2"	13 GA.	9"	2	1/2"	18-1/2"	157.12
W24 X 68 TO 84	3/8"	18-1/2"	3/16"	9"	2	1/2"	18-1/2"	161.61
W24 X 68 TO 94	3/8"	18-1/2"	5/16"	9"	2	1/2"	18-1/2"	167.35
W24 X 76 TO 76	1/2"	2'-1/2"	—	—	3	1/2"	18-1/2"	187.71
W24 X 76 TO 84	1/2"	2'-1/2"	13 GA.	12"	3	1/2"	18-1/2"	193.21
W24 X 76 TO 94	1/2"	2'-1/2"	3/16"	12"	3	1/2"	18-1/2"	199.20
W24 X 84 TO 84	1/2"	2'-6 1/2"	—	—	4	5/8"	2'-1/2"	231.25
W24 X 84 TO 94	1/2"	2'-6 1/2"	12 GA.	12"	4	5/8"	2'-1/2"	237.66
W24 X 94 TO 94	5/8"	2'-6 1/2"	—	—	4	5/8"	2'-1/2"	250.52

(*) WEIGHT WITH BOLTS

BOLTED FIELD SPLICES

27" WIDE FLANGE BEAMS
LOW ALLOY STEEL
(BEAMS AND SPLICE PLATES)

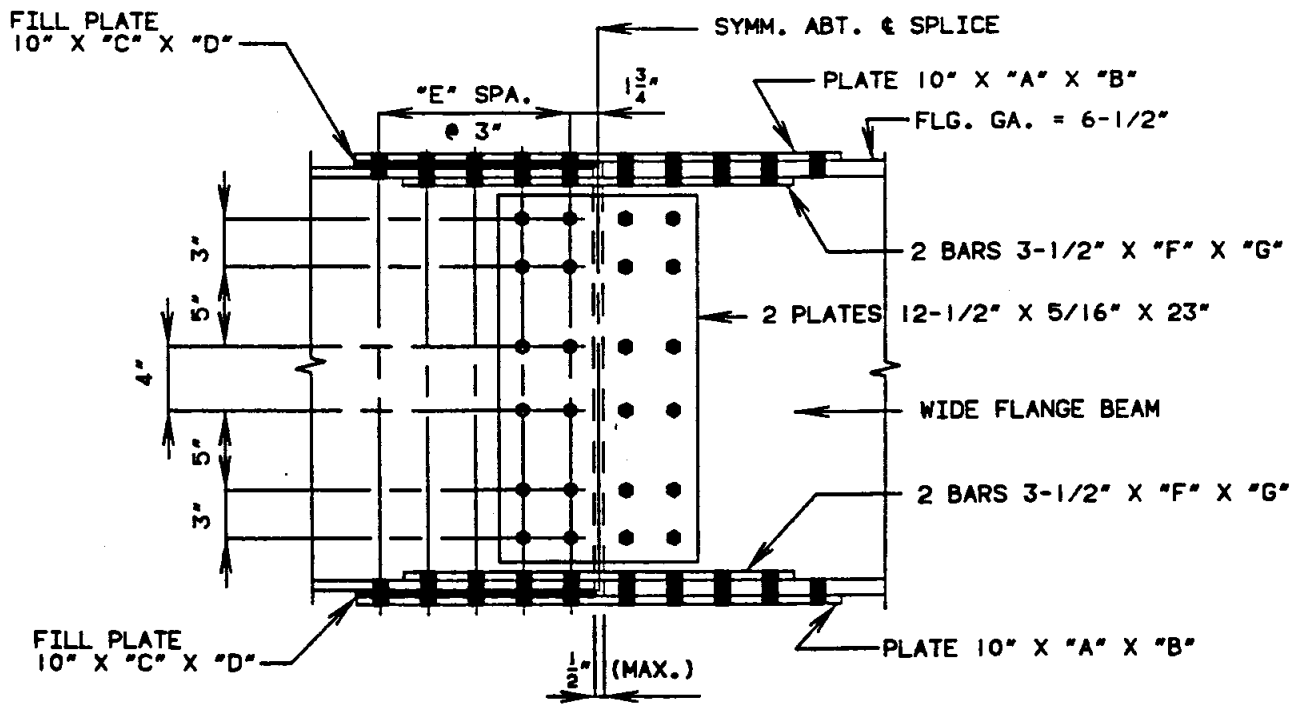

W27 X 84 THRU W27 X 114

NOTE: 15/16"Ø HOLES FOR 7/8"Ø HIGH STRENGTH BOLTS.

SIZE OF BEAMS	"A"	"B"	"C"	"D"	"E"	"F"	"G"	WEIGHT(•)
W27 X 84 TO 84	1/2"	2'-6 1/2"	—	—	4	1/2"	2'-1/2"	246.87
W27 X 84 TO 94	1/2"	2'-6 1/2"	12 GA.	15"	4	1/2"	2'-1/2"	255.77
W27 X 84 TO 102	1/2"	2'-6 1/2"	3/16"	15"	4	1/2"	2'-1/2"	262.82
W27 X 84 TO 114	1/2"	2'-6 1/2"	5/16"	15"	4	1/2"	2'-1/2"	273.45
W27 X 94 TO 94	1/2"	2'-6 1/2"	—	—	4	1/2"	2'-1/2"	246.87
W27 X 94 TO 102	1/2"	2'-6 1/2"	13 GA.	15"	4	1/2"	2'-1/2"	254.51
W27 X 94 TO 114	1/2"	2'-6 1/2"	3/16"	15"	4	1/2"	2'-1/2"	262.82
W27 X 102 TO 102	1/2"	2'-6 1/2"	—	—	4	5/8"	2'-1/2"	259.03
W27 X 102 TO 114	1/2"	2'-6 1/2"	12 GA.	15"	4	5/8"	2'-1/2"	267.93
W27 X 114 TO 114	5/8"	3'-1/2"	—	—	5	5/8"	2'-6 1/2"	324.41

(•) WEIGHT WITH BOLTS

BOLTED FIELD SPLICES

30" WIDE FLANGE BEAMS
LOW ALLOY STEEL
(BEAMS AND SPLICE PLATES)

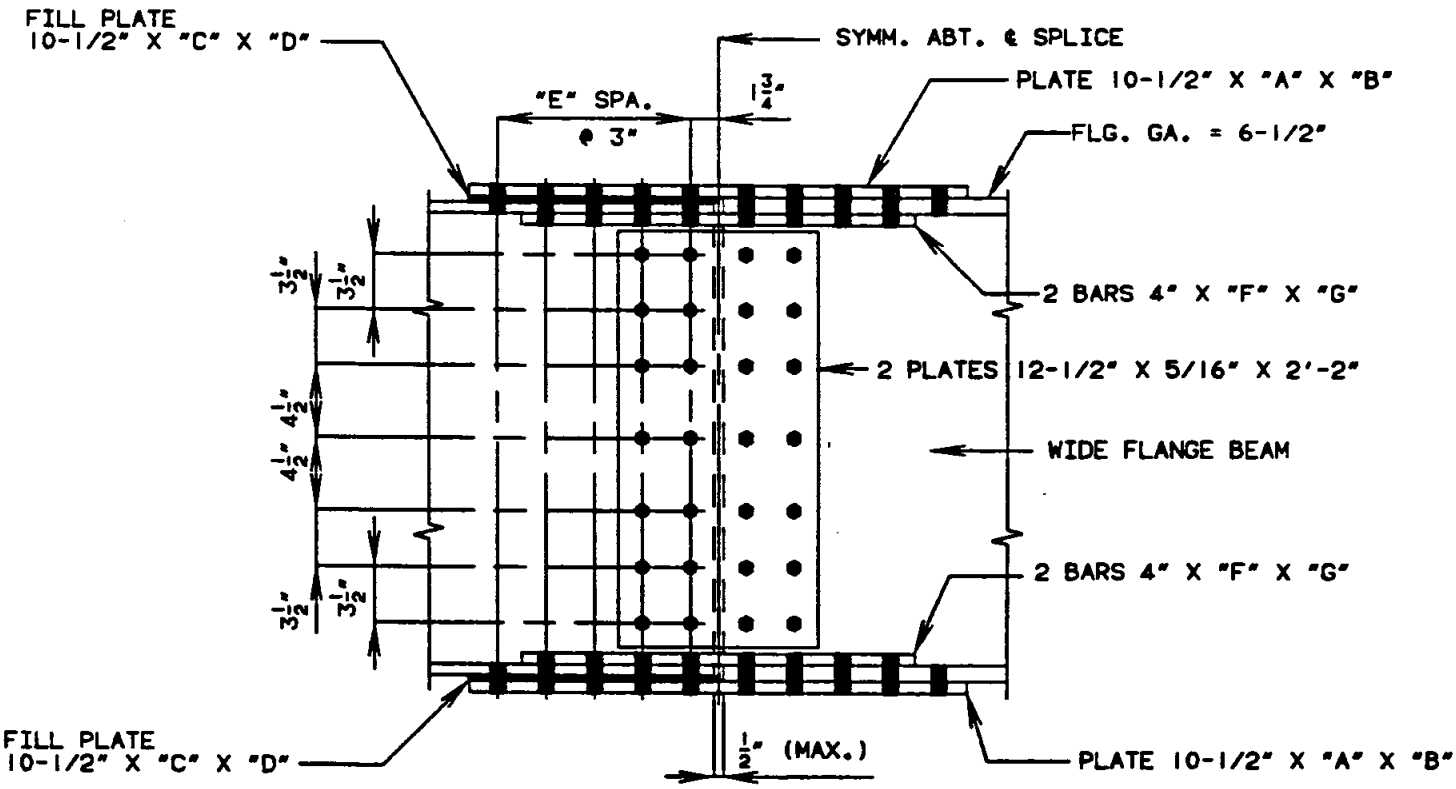

W30 X 99 THRU W30 X 132

NOTE: 15/16"Ø HOLES FOR 7/8"Ø HIGH STRENGTH BOLTS.

SIZE OF BEAMS	"A"	"B"	"C"	"D"	"E"	"F"	"G"	WEIGHT(•)
W30 X 99 TO 99	3/8"	2'-1/2"	—	—	3	1/2"	2'-1/2"	224.89
W30 X 99 TO 108	3/8"	2'-1/2"	13 GA.	12"	3	1/2"	2'-1/2"	231.30
W30 X 99 TO 116	3/8"	2'-1/2"	3/16"	12"	3	1/2"	2'-1/2"	238.29
W30 X 99 TO 124	3/8"	2'-1/2"	1/4"	12"	3	1/2"	2'-1/2"	242.76
W30 X 99 TO 132	3/8"	2'-1/2"	5/16"	12"	3	1/2"	2'-1/2"	247.22
W30 X 108 TO 108	1/2"	2'-6 1/2"	—	—	4	1/2"	2'-1/2"	268.59
W30 X 108 TO 116	1/2"	2'-6 1/2"	13 GA.	15"	4	1/2"	2'-1/2"	276.60
W30 X 108 TO 124	1/2"	2'-6 1/2"	8 GA.	15"	4	1/2"	2'-1/2"	283.27
W30 X 108 TO 132	1/2"	2'-6 1/2"	1/4"	15"	4	1/2"	2'-1/2"	290.92
W30 X 116 TO 116	1/2"	2'-6 1/2"	—	—	4	5/8"	2'-1/2"	282.49
W30 X 116 TO 124	1/2"	2'-6 1/2"	14 GA.	15"	4	5/8"	2'-1/2"	289.16
W30 X 116 TO 132	1/2"	2'-6 1/2"	9 GA.	15"	4	5/8"	2'-1/2"	295.84
W30 X 124 TO 124	1/2"	2'-6 1/2"	—	—	4	3/4"	2'-6 1/2"	316.79
W30 X 124 TO 132	1/2"	2'-6 1/2"	15 GA.	15"	4	3/4"	2'-6 1/2"	322.81
W30 X 132 TO 132	5/8"	3'-1/2"	—	—	5	3/4"	2'-6 1/2"	369.43

(•) WEIGHT WITH BOLTS

BOLTED FIELD SPLICES

33" WIDE FLANGE BEAMS
LOW ALLOY STEEL
(BEAMS AND SPLICE PLATES)

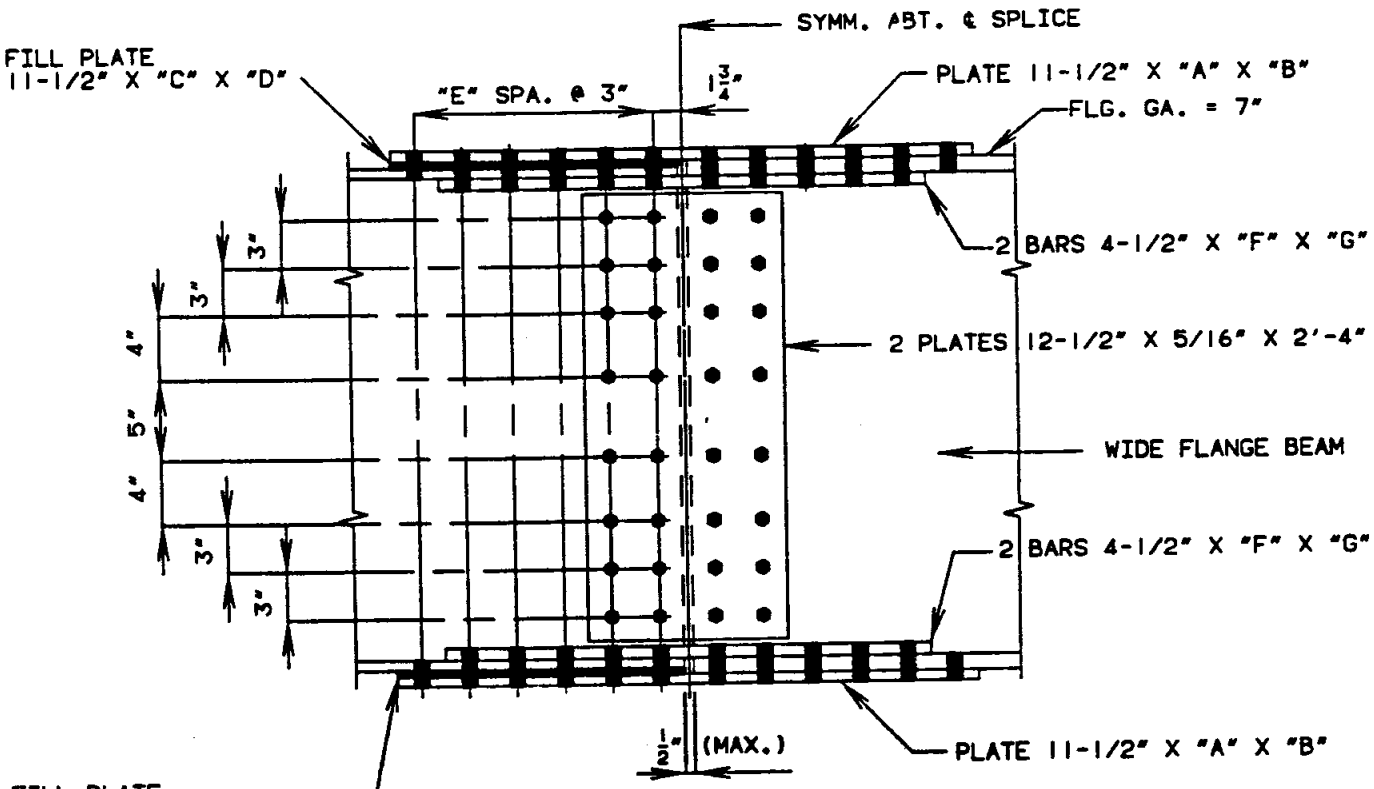

W33 X 118 THRU W33 X 152

NOTE: 15/16"Ø HOLES FOR 7/8"Ø HIGH STRENGTH BOLTS.

SIZE OF BEAMS	"A"	"B"	"C"	"D"	"E"	"F"	"G"	WEIGHT(•)
W33 X 118 TO 118	1/2"	3'-1/2"	—	—	5	1/2"	2'-6 1/2"	334.90
W33 X 118 TO 130	1/2"	3'-1/2"	11 GA.	18"	5	1/2"	2'-6 1/2"	348.94
W33 X 118 TO 141	1/2"	3'-1/2"	1/4"	18"	5	1/2"	2'-6 1/2"	364.25
W33 X 118 TO 152	1/2"	3'-1/2"	5/16"	18"	5	1/2"	2'-6 1/2"	371.58
W33 X 130 TO 130	1/2"	3'-1/2"	—	—	5	5/8"	2'-6 1/2"	354.36
W33 X 130 TO 141	1/2"	3'-1/2"	12 GA.	18"	5	5/8"	2'-6 1/2"	366.64
W33 X 130 TO 152	1/2"	3'-1/2"	3/16"	18"	5	5/8"	2'-6 1/2"	376.37
W33 X 141 TO 141	5/8"	3'-6 1/2"	—	—	5	5/8"	3'-1/2"	427.71
W33 X 141 TO 152	5/8"	3'-6 1/2"	13 GA.	21"	5	5/8"	3'-1/2"	439.99
W33 X 152 TO 152	5/8"	3'-6 1/2"	—	—	6	3/4"	3'-1/2"	458.59

(•) WEIGHT WITH BOLTS

BOLTED FIELD SPLICES

36" WIDE FLANGE BEAMS
LOW ALLOY STEEL
(BEAMS AND SPLICE PLATES)

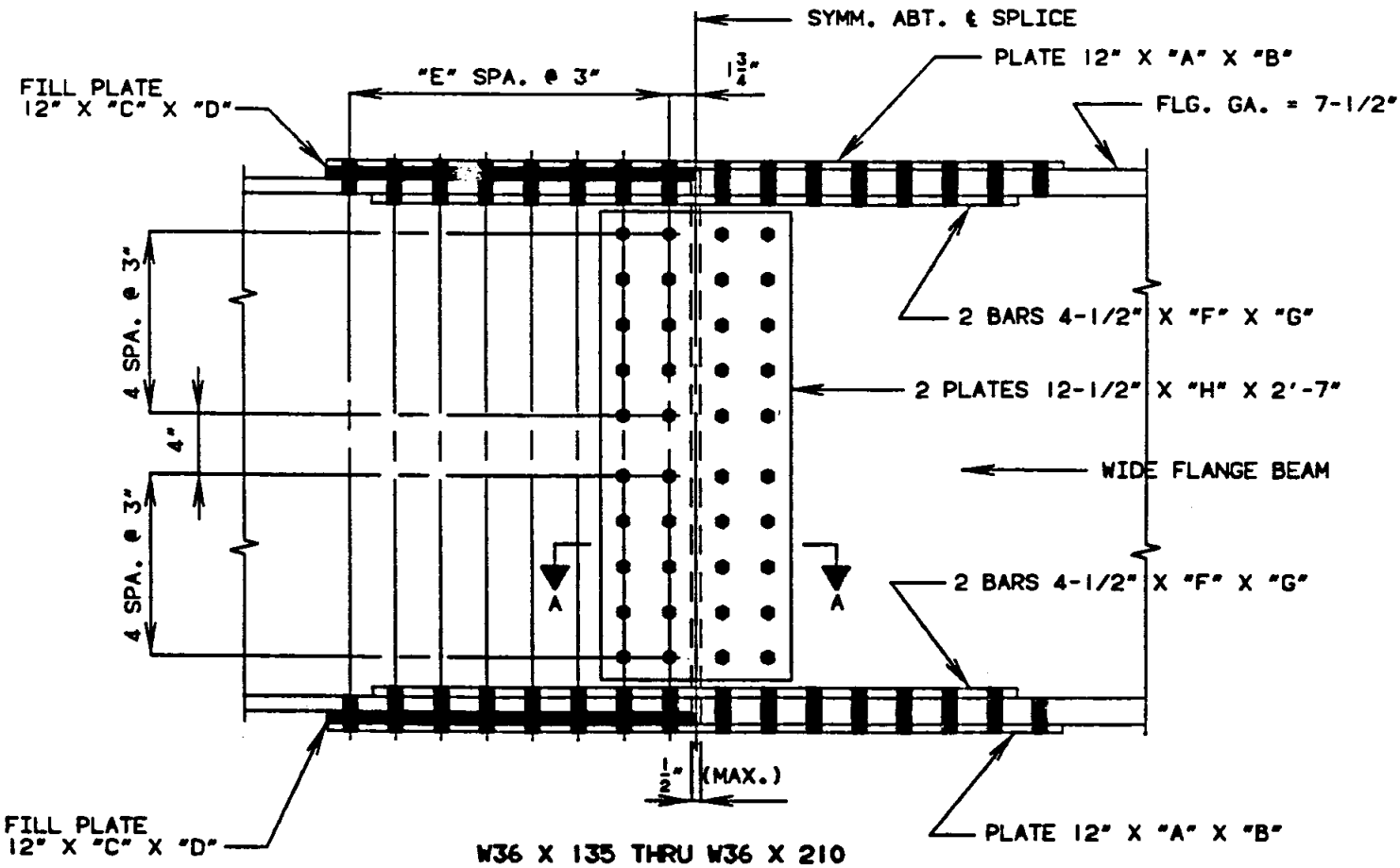

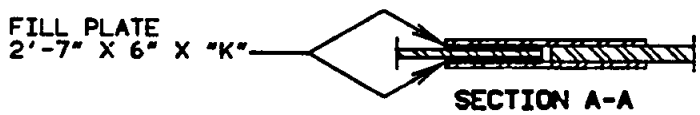

NOTE: 15/16"Ø HOLES FOR 7/8"Ø HIGH STRENGTH BOLTS.

NOTE: SEE THE FOLLOWING SHEET FOR THE DIMENSIONS AND WEIGHTS TABLE.

BOLTED FIELD SPLICES

36" WIDE FLANGE BEAMS (CONT.)
LOW ALLOY STEEL
(BEAMS AND SPLICE PLATES) (CONT.)

NOTE: 15/16"Ø HOLES FOR 7/8"Ø HIGH STRENGTH BOLTS.

SIZE OF BEAMS	"A"	"B"	"C"	"D"	"E"	"F"	"G"	"H"	"K"	WEIGHT(•)
W36 X 135 TO 135	1/2"	3'-1/2"	—	—	5	5/8"	2'-6 1/2"	5/16"	—	373.78
W36 X 135 TO 150	1/2"	3'-1/2"	9 GA.	18"	5	5/8"	2'-6 1/2"	5/16"	—	392.09
W36 X 135 TO 160	1/2"	3'-1/2"	1/4"	18"	5	5/8"	2'-6 1/2"	5/16"	—	404.40
W36 X 135 TO 170	1/2"	3'-1/2"	5/16"	18"	5	5/8"	2'-6 1/2"	5/16"	—	412.06
W36 X 135 TO 182	1/2"	3'-1/2"	3/8"	18"	5	5/8"	2'-6 1/2"	5/16"	—	419.71
W36 X 135 TO 194	1/2"	3'-1/2"	1/2"	18"	5	5/8"	2'-6 1/2"	5/16"	14 GA.	442.91
W36 X 135 TO 210	1/2"	3'-1/2"	9/16"	18"	5	5/8"	2'-6 1/2"	5/16"	11 GA.	455.30
W36 X 150 TO 150	1/2"	3'-1/2"	—	—	5	3/4"	3'-1/2"	5/16"	—	416.21
W36 X 150 TO 160	1/2"	3'-1/2"	14 GA.	18"	5	3/4"	3'-1/2"	5/16"	—	425.36
W36 X 150 TO 170	1/2"	3'-1/2"	8 GA.	18"	5	3/4"	3'-1/2"	5/16"	—	436.34
W36 X 150 TO 182	1/2"	3'-1/2"	1/4"	18"	5	3/4"	3'-1/2"	5/16"	—	446.83
W36 X 150 TO 194	1/2"	3'-1/2"	5/16"	18"	5	3/4"	3'-1/2"	5/16"	15 GA.	461.59
W36 X 150 TO 210	1/2"	3'-1/2"	7/16"	18"	5	3/4"	3'-1/2"	5/16"	12 GA.	480.83
W36 X 160 TO 160	5/8"	3'-6 1/2"	—	—	6	3/4"	3'-1/2"	5/16"	—	480.38
W36 X 160 TO 170	5/8"	3'-6 1/2"	14 GA.	21"	6	3/4"	3'-1/2"	5/16"	—	491.05
W36 X 160 TO 182	5/8"	3'-6 1/2"	8 GA.	21"	6	3/4"	3'-1/2"	5/16"	—	503.87
W36 X 160 TO 194	5/8"	3'-6 1/2"	1/4"	21"	6	3/4"	3'-1/2"	5/16"	—	516.11
W36 X 160 TO 210	5/8"	3'-6 1/2"	5/16"	21"	6	3/4"	3'-1/2"	5/16"	13 GA.	534.50
W36 X 170 TO 170	3/4"	4'-1/2"	—	—	7	3/4"	3'-6 1/2"	5/16"	—	577.73
W36 X 170 TO 182	3/4"	4'-1/2"	14 GA.	2'-0"	7	3/4"	3'-6 1/2"	5/16"	—	589.93
W36 X 170 TO 194	3/4"	4'-1/2"	8 GA.	2'-0"	7	3/4"	3'-6 1/2"	5/16"	—	604.58
W36 X 170 TO 210	3/4"	4'-1/2"	1/4"	2'-0"	7	3/4"	3'-6 1/2"	5/16"	14 GA.	626.44
W36 X 182 TO 182	3/4"	4'-1/2"	—	—	7	3/4"	3'-6 1/2"	3/8"	—	591.46
W36 X 182 TO 194	3/4"	4'-1/2"	14 GA.	2'-0"	7	3/4"	3'-6 1/2"	3/8"	—	603.66
W36 X 182 TO 210	3/4"	4'-1/2"	3/16"	2'-0"	7	3/4"	3'-6 1/2"	3/8"	—	622.09
W36 X 194 TO 194	3/4"	4'-1/2"	—	—	7	7/8"	3'-6 1/2"	3/8"	—	618.58
W36 X 194 TO 210	3/4"	4'-1/2"	12 GA.	2'-0"	7	7/8"	3'-6 1/2"	3/8"	—	635.66
W36 X 210 TO 210	7/8"	4'-6 1/2"	—	—	8	1"	4'-1/2"	3/8"	—	760.91

(•) WEIGHT WITH BOLTS

NOTE: SEE THE PRCEEDING SHEET FOR 36" WIDE FLANGE BEAM DETAILS.

WELDED SPLICE DETAILS

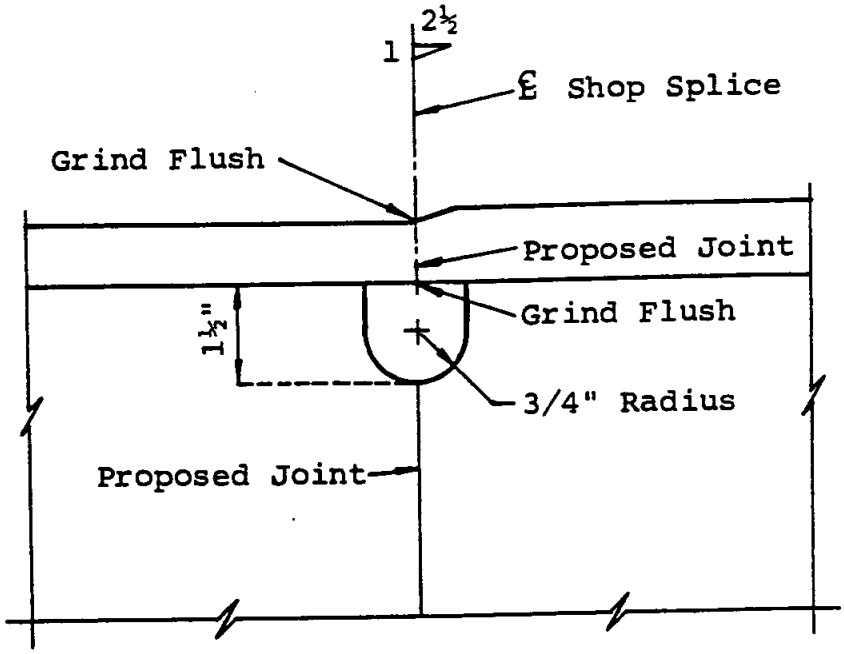

WELDED SHOP SPLICE

See Section 4 for appropriate notes.

fs = 20,000 psi

Span L = Stringer spacing along skew

w = 2' of slab + Weight of diaphragm

DL Mo = $1/8\ wL^2$

LL + I Mo = $\left(\frac{PL}{4} - \frac{P \times 1.25}{2 \times 4}\right)$ 1.3

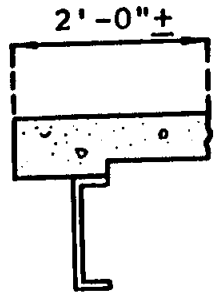

SECTION THRU
END DIAPHRAGM

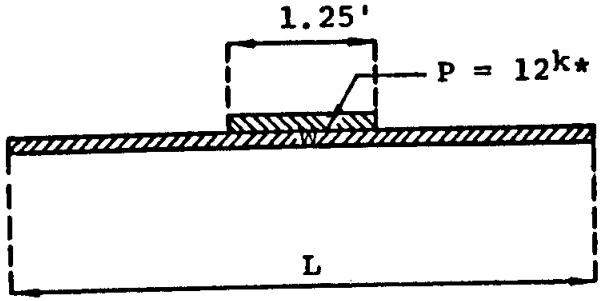

* Use for H15 or H20 due to slab carrying part of load.

STANDARD END DIAPHRAGMS								
STR. SPA.	7'-2"	7'-4"	7'-9"	7'-10"	8'-4"	8'-10"	9'-9"	9'-10"
SKEW	SIZE AND WEIGHT							
0°	C12x20.7	C12x20.7	C12x20.7	C12x20.7	C12x20.7	C12x20.7	C12x25	C12x25
10°	C12x20.7	C12x20.7	C12x20.7	C12x20.7	C12x20.7	C12x20.7	C12x25	C12x25
20°	C12x20.7	C12x20.7	C12x20.7	C12x20.7	C12x20.7	C12x25	C12x30	C12x30
30°	C12x20.7	C12x20.7	C12x20.7	C12x20.7	C12x25	C12x30	C15x33.9	C15x33.9
40°	C12x25	C12x25	C12x30	C12x30	C12x30	C15x33.9	C15x33.9	C15x33.9
50°	C15x33.9	C15x33.9	C15x33.9	C15x33.9	C15x33.9	C15x33.9	C15x33.9	C15x33.9
60°	C15x33.9	C15x33.9	C15x33.9	C15x33.9	W16x36	W16x36	W16x36	W16x36

INTERMEDIATE DIAPHRAGMS AND CONNECTIONS

(✳) Weld as positive connection as flanges in accordance with AASHTO 10.19.3.2.

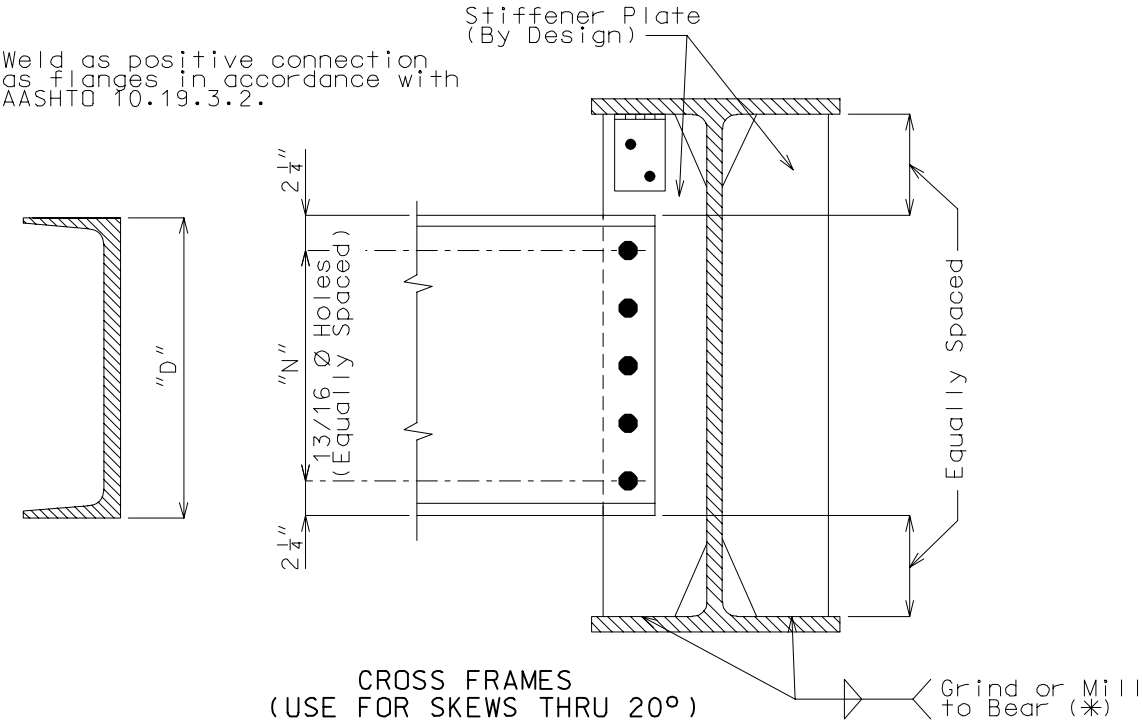

CROSS FRAMES
(USE FOR SKEWS THRU 20°)

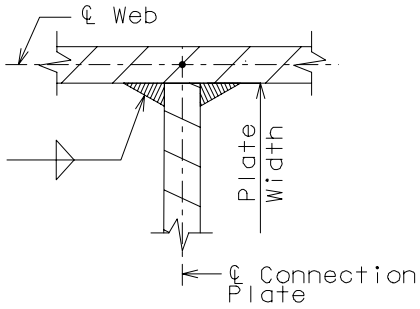

INTERMEDIATE DIAPHRAGM
CONNECTION

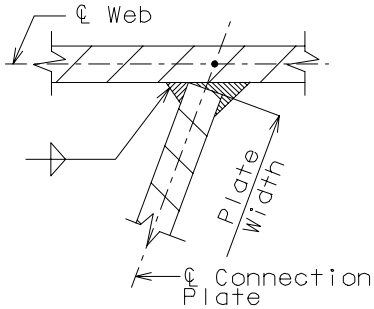

CROSS FRAME CONNECTION

(Cross Frames are used only at Int. Bents along ℄ Bearing for skews thru 20°. For skews greater than 20° use the intermediate diahpragm detail.)

W Shape	"D"	"N"	Plate
21W & 24W	12"	4	C12 x 20.7
27W	15"	4	5/16 x 23
30W	18"	5	5/16 x 26
33W & 36W	21"	5	5/16 x 29

21"W SHAPE THRU 36"W SHAPE

INTERMEDIATE DIAPHRAGMS AND CONNECTIONS (CONT.)

Maximum spacing:
15′-0″ for all curved stringers
25′-0″ for all straight stringers

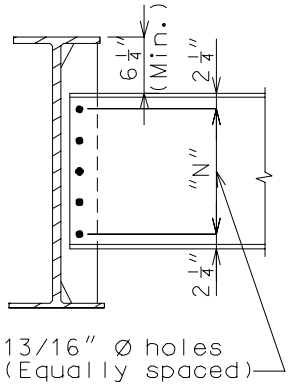

TOP FLANGE IN TENSION

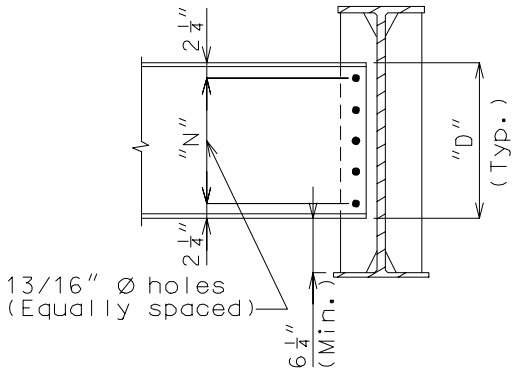

BOTTOM FLANGE IN TENSION

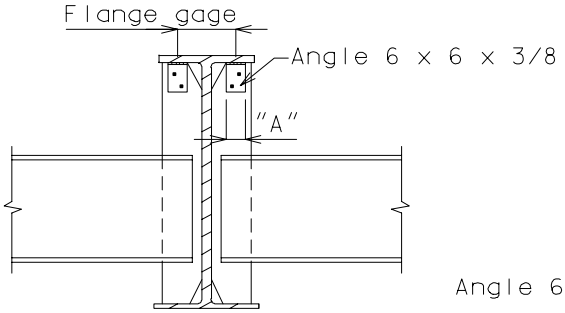

TOP FLANGE IN TENSION

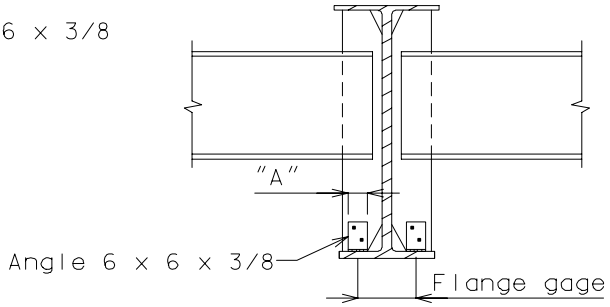

BOTTOM FLANGE IN TENSION

SECTION THRU WF AT INT. DIAPHRAGM

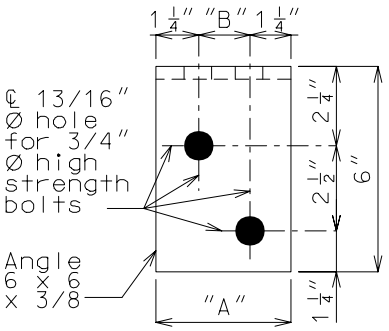

PLAN
DETAIL OF FLANGE
CONNECTION ANGLE

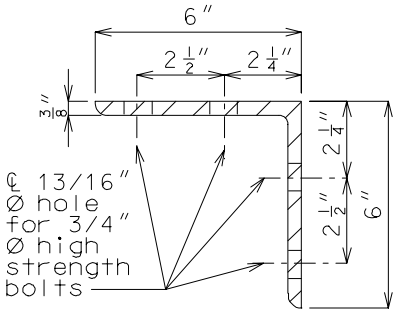

SECTION THRU OF
FLANGE CONNECTION
ANGLE 6 x 6 x 3/8

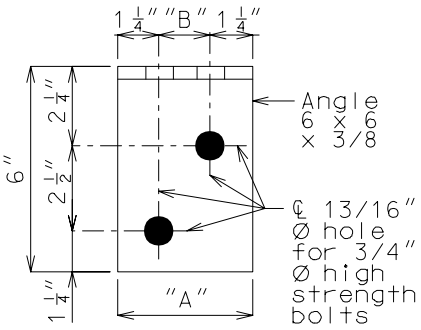

FRONT ELEVATION
DETAIL OF FLANGE
CONNECTION ANGLE

W Shape	"D"	"N"	Channel or Plate	Flange Gage	"A"	"B"
W21 X 62 thru W21 X 93	12″	4	C12 x 20.7	4-3/4″	3″	1/2″
W24 X 68 thru W24 X 94	12″	4	C12 x 20.7	5-1/2″	3″	1/2″
W27 X 84 thru W27 X 114	15″	4	5/16 x 23	6-1/2″	4″	1-1/2″
W30 X 99 thru W30 X 132	18″	5	5/16 x 26	6-1/2″	4″	1-1/2″
W33 X 118 thru W33 X 152	21″	5	5/16 x 29	7″	4″	1-1/2″
W36 X 135 thru W36 X 210	21″	5	5/16 x 29	7-1/2″	4″	1-1/2″

INTERMEDIATE DIAPHRAGM LOCATION

TYPICAL PLAN OF STRUCTURAL STEEL

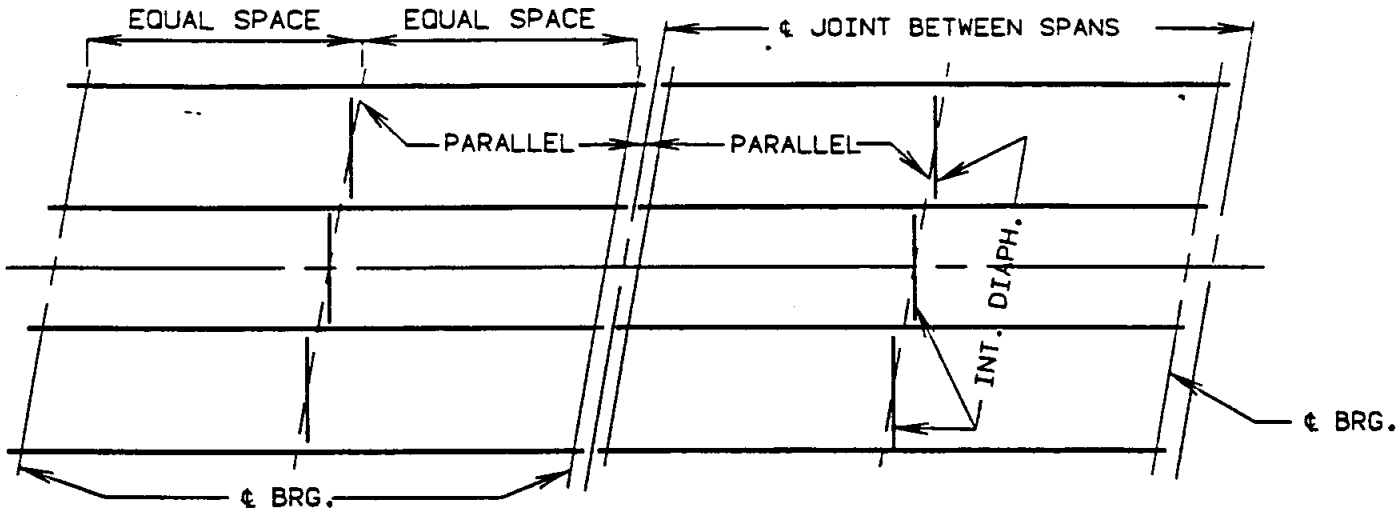

ALL SKEWS

SIMPLE STRUCTURES

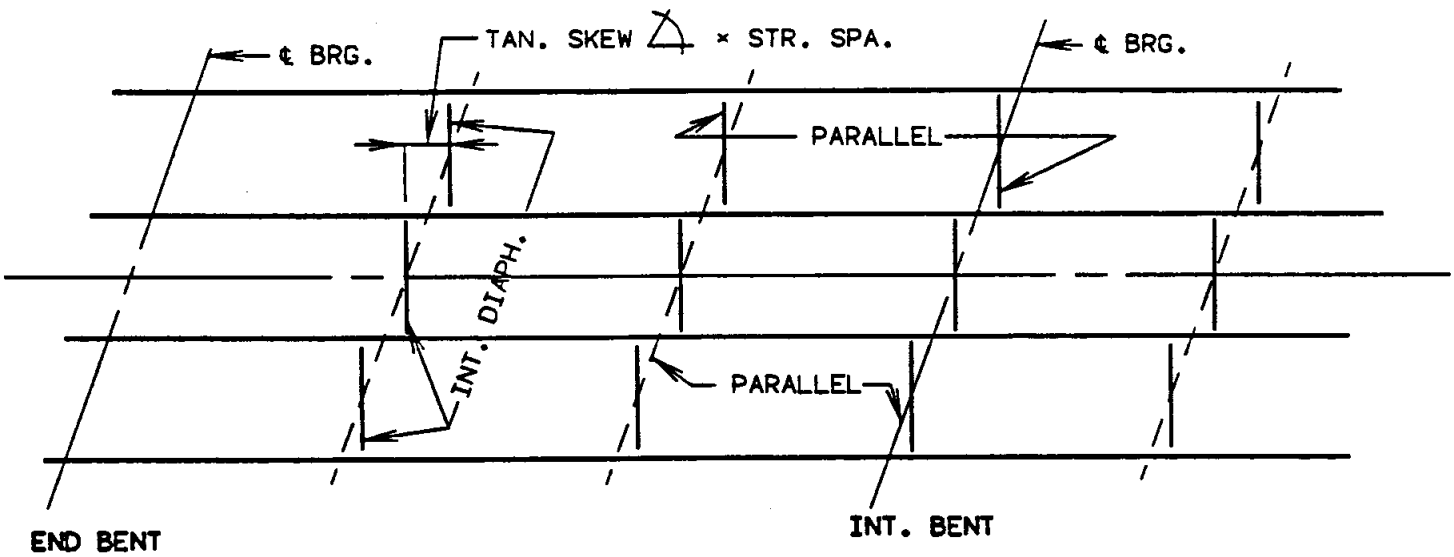

CONT. STRUCTURES - SKEWS OVER 20 DEGREES

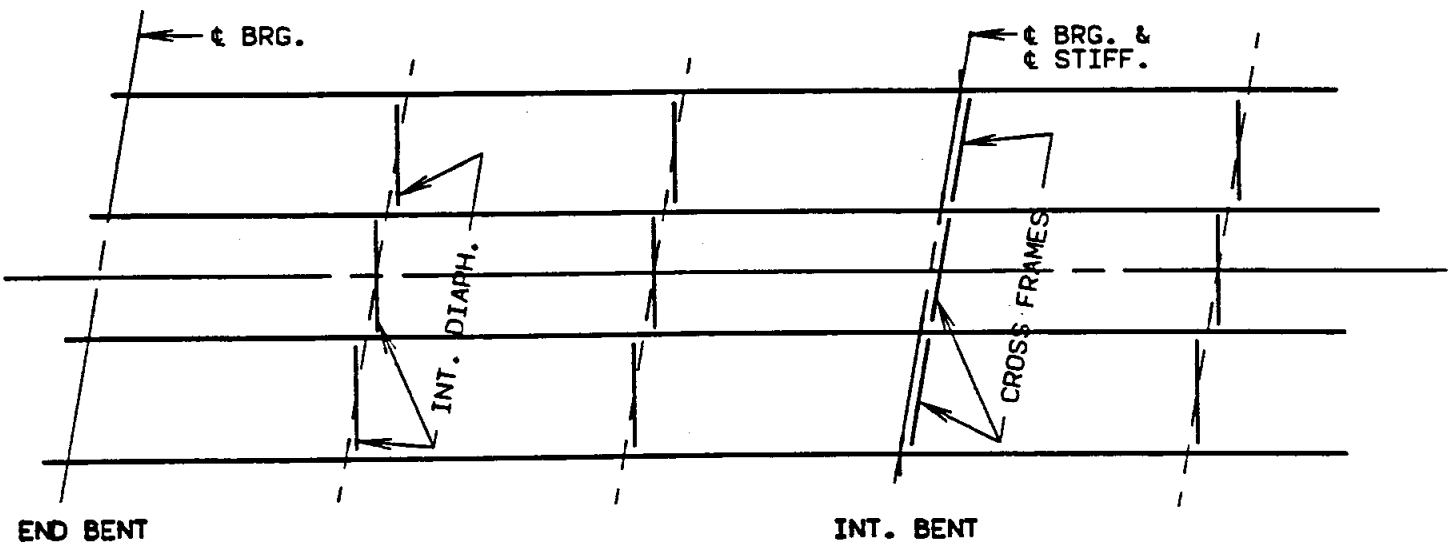

CONT. STRUCTURES - SKEWS THRU 20 DEGREES

INTERMEDIATE DIAPHRAGMS

DIAPHRAGM SPACING FOR CURVED STRINGERS

DIAPHRAGM SPACING:

Maximum diaphragm spacing shall be 15'-0" unless determined otherwise for special designs.

DIAPHRAGM POSITIONING:

Diaphragms shall be spaced radially and in line except in bridges having extreme skews. Proposed diaphragm layout shall be reviewed with the Structural Design Engineer prior to detailing in plans.

LOCATION OF DIAPHRAGMS:

Diaphragms must be located along the centerline of structure by the designer before sending a program to the computer. The Design Development Engineer will give assistance in programming procedure if desired. The sketch shown below is an example of desired diaphragm dimensioning.

SPECIAL DESIGN:

Special design will be required for diaphragms when the degree of curvature exceeds 3° or when span length exceeds 70'. See Design Group Leader or Chief Designer for approved design references.

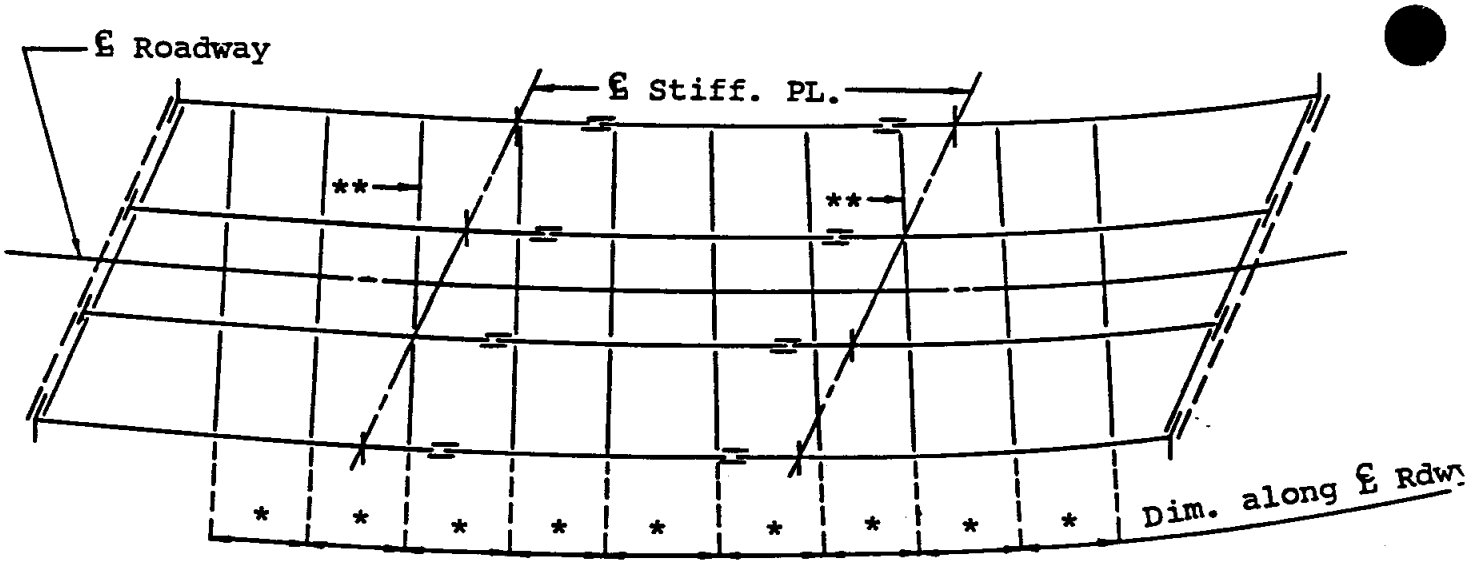

PLAN OF STRUCTURAL STEEL

* Maximum 15'-0".

** Many different spacing arrangements are possible. Attach to bearing stiffener where practical.

SPACING OF INT. DIAPHRAGMS FROM FIELD SPLICE

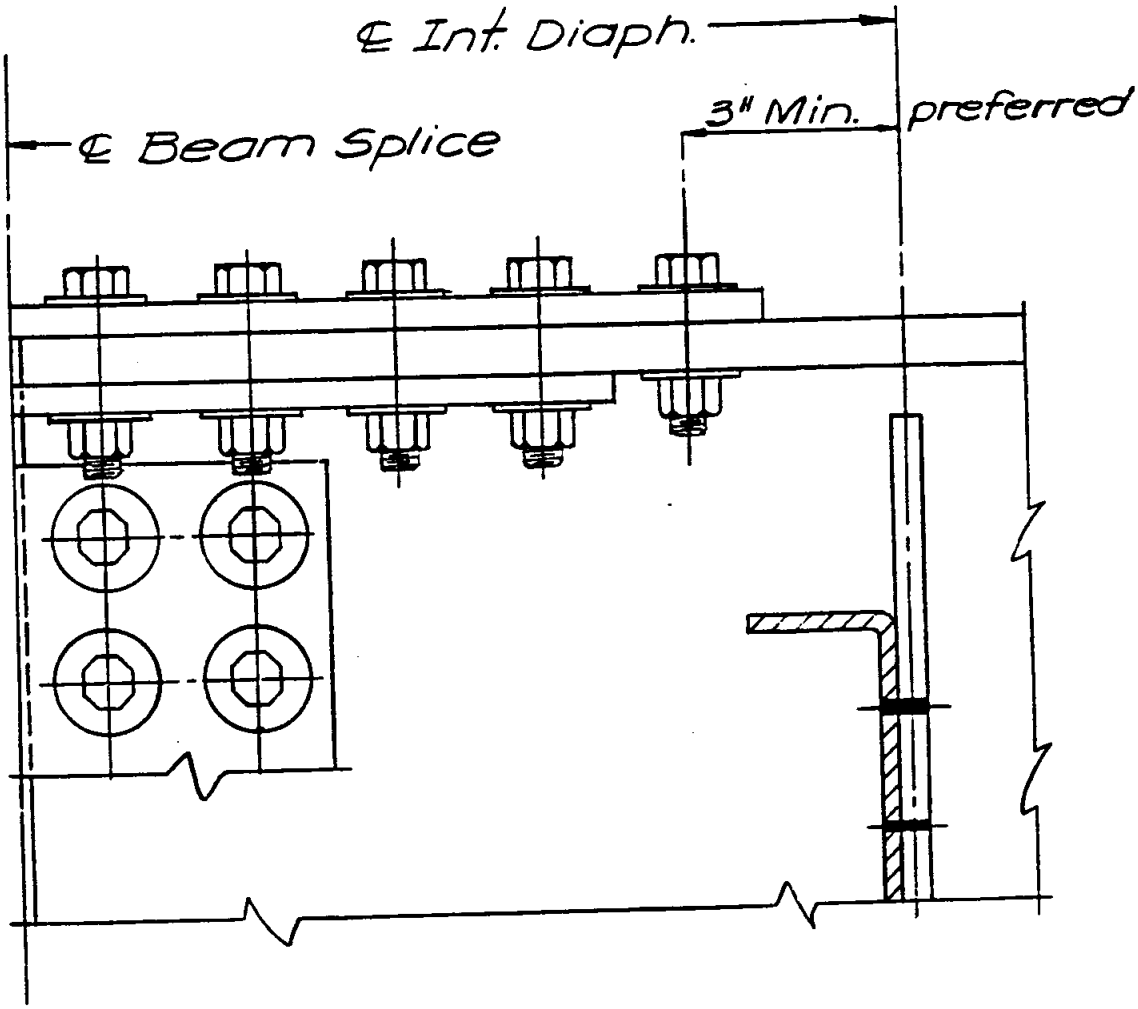

BENT PLATE OR CHANNEL DIAPHRAGM

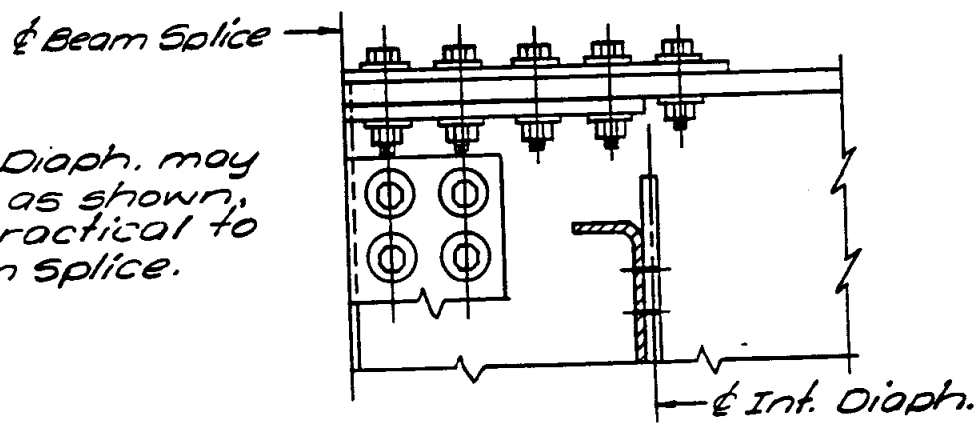

* The Int. Diaph. may be located as shown, when impractical to clear Beam Splice.

ALTERED INT. DIAPH. *

OFFSETS FOR CURVED STRINGERS

ATTENTION DESIGNER:

When preparing the computer input for horizontal control the designer should call for ℄ Exterior Stringers offsets.

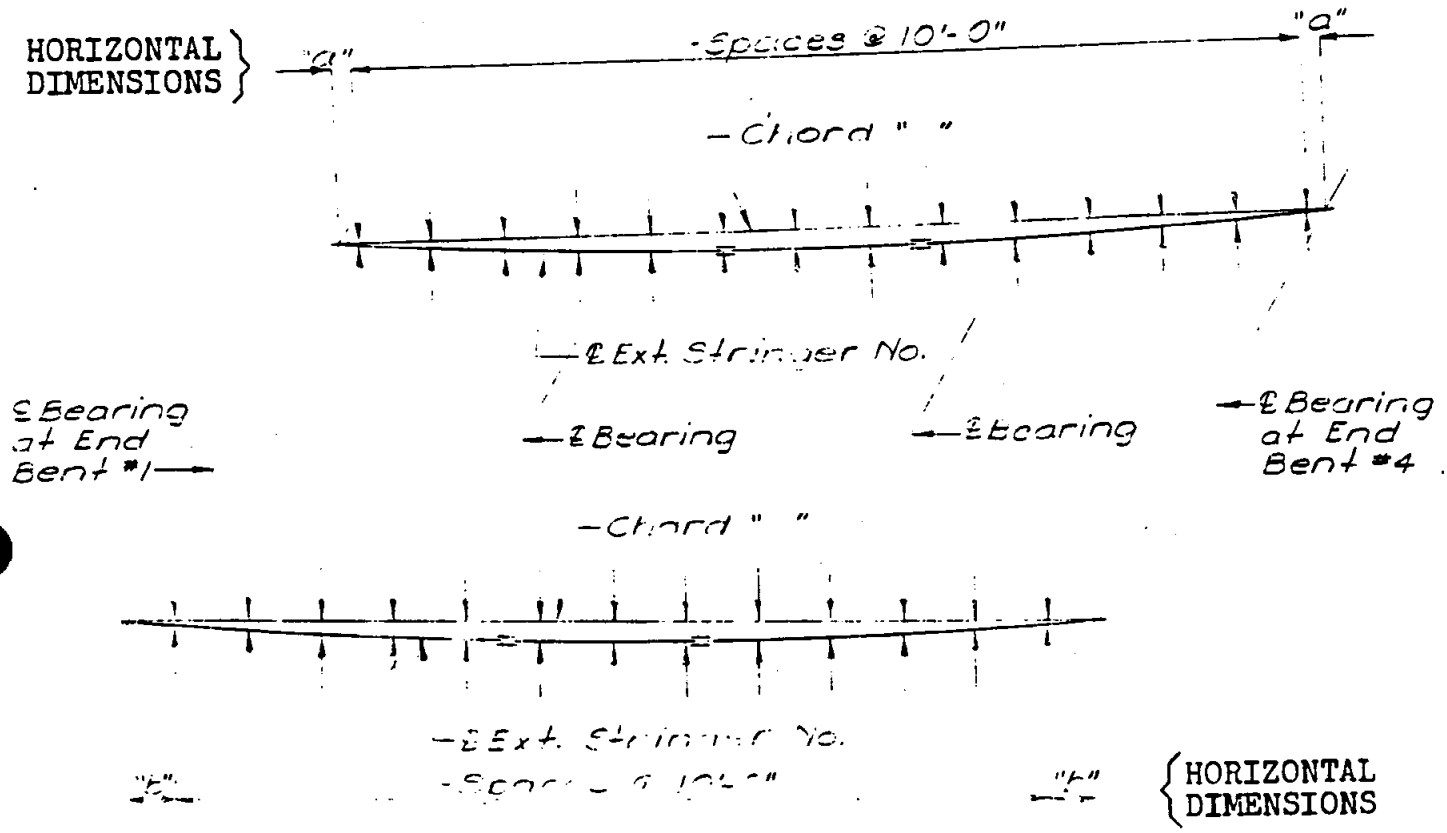

PART PLAN OF STRUCTURAL STEEL
SHOWING ℄ STRINGER CURVE OFFSETS

Note: Structures having horizontally curved wide flange beams shall have details similar to those shown above placed near the "Plan of Structural Steel".

Typical example for 3 span structure shown.

STRINGER ELEVATIONS VARIATION SKETCH

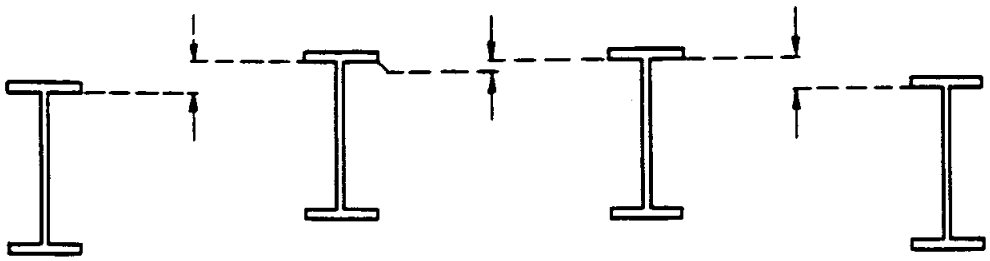

SECTION THRU STRINGER NORMAL TO ℄ ROADWAY

	LOCATION	a	b	c
Typ.	Bt. No. 1 to Splice S1			
	Splice S1 to Splice S2			
	Splice S2 to Bt. No. 4			

Dimensions showing stringer variation shall be placed on the cross section thru slab or, if necessary because of the number and type of variations, the above type of detail and table shall be placed near the structural steel layout.

END DIAPHRAGMS
WEIGHTS

END DIAPHRAGMS FOR 21" WF BEAMS WITH CONNECTION PLATES								
SKEW	STRINGER SPACING							
	7'-2"	7'-4"	7'-9"	7'-10"	8'-4"	8'-10"	9'-9"	9'-10"
0°	163	167	176	177	188	198	257	260
10°	168	171	180	182	192	202	263	265
20°	175	179	188	190	201	251	325	328
30°	188	192	202	204	256	320	394	398
40°	257	262	325	328	347	411	451	455
50°	402	410	432	437	463	490	538	542
60°	510	521	549	555	623	659	725	731

Note: The above weight includes bolts and connection plates.

END DIAPHRAGMS FOR 24" WF BEAMS WITH CONNECTION PLATES								
SKEW	STRINGER SPACING							
	7'-2"	7'-4"	7'-9"	7'-10"	8'-4"	8'-10"	9'-9"	9'-10"
0°	165	169	178	179	190	200	259	262
10°	170	173	182	184	194	204	265	267
20°	177	181	190	192	203	253	327	330
30°	190	194	204	206	258	322	396	400
40°	260	265	328	331	350	414	454	458
50°	406	414	436	441	467	494	542	546
60°	514	525	553	559	627	663	729	735

Note: The above weight includes bolts and connection plates.

END DIAPHRAGMS

WEIGHTS

END DIAPHRAGMS FOR 21" & 24" WF BEAMS								
SKEW	STRINGER SPACING							
	7'-2"	7'-4"	7'-9"	7'-10"	8'-4"	8'-10"	9'-9"	9'-10"
0°	147	151	160	161	172	182	241	244
10°	150	153	162	164	174	184	245	247
20°	157	161	170	172	183	233	307	310
30°	170	174	184	186	238	302	376	380
40°	232	237	300	303	322	386	426	430
50°	373	381	403	408	434	461	509	513
60°	481	492	520	526	594	630	696	702

Note: The above weight includes bolts, no connection plates.

END DIAPHRAGMS FOR 27" THRU 36" WF BEAMS								
SKEW	STRINGER SPACING							
	7'-2"	7'-4"	7'-9"	7'-10"	8'-4"	8'-10"	9'-9"	9'-10"
0°	160	164	173	174	185	195	254	257
10°	163	166	175	177	187	197	258	260
20°	170	174	183	185	196	246	320	323
30°	183	187	197	199	251	315	389	393
40°	245	250	313	316	335	399	439	443
50°	386	394	416	421	447	474	522	526
60°	494	505	533	539	607	643	709	715

Note: The above weight includes bolts, no stiffener plates.

CROSS FRAMES

WEIGHTS

CROSS FRAMES - SQUARE								
STRINGER SIZE	STRINGER SPACING							
	7'-2"	7'-4"	7'-9"	7'-10"	8'-4"	8'-10"	9'-9"	9'-10"
21" WF	150	153	162	163	174	184	203	205
24" WF	150	153	162	163	174	184	203	205
27" WF	176	180	190	192	204	216	239	241
30" WF	198	202	214	216	230	244	269	271
33" WF	220	225	238	240	256	271	299	302
36" WF	220	225	238	240	256	271	299	302

CROSS FRAMES - 10° SKEW								
STRINGER SIZE	STRINGER SPACING							
	7'-2"	7'-4"	7'-9"	7'-10"	8'-4"	8'-10"	9'-9"	9'-10"
21" WF	152	155	164	166	176	187	206	208
24" WF	152	155	164	166	176	187	206	208
27" WF	178	182	193	195	207	220	242	244
30" WF	201	205	217	219	233	247	273	275
33" WF	223	228	241	244	260	275	304	306
36" WF	223	228	241	244	260	275	304	306

CROSS FRAMES - 20° SKEW								
STRINGER SIZE	STRINGER SPACING							
	7'-2"	7'-4"	7'-9"	7'-10"	8'-4"	8'-10"	9'-9"	9'-10"
21" WF	159	162	172	173	184	195	216	218
24" WF	159	162	172	173	184	195	216	218
27" WF	186	191	202	204	217	230	254	256
30" WF	210	215	227	230	244	259	286	288
33" WF	233	239	253	255	272	288	318	321
36" WF	233	239	253	255	272	288	318	321

Note: Weights for Cross Frames shown above include bolts, no stiffener plates.

INTERMEDIATE DIAPHRAGM WEIGHTS

INTERMEDIATE DIAPHRAGMS - SQUARE								
STRINGER SIZE	STRINGER SPACING							
	7'-2"	7'-4"	7'-9"	7'-10"	8'-4"	8'-10"	9'-9"	9'-10"
21" WF	161	164	173	174	185	195	214	216
24" WF	163	166	175	176	187	197	216	218
27" WF	192	196	206	208	220	232	255	257
30" WF	216	220	232	234	248	262	287	289
33" WF	240	245	258	260.	276	291	319	322
36" WF	242	247	260	262	278	293	321	324

NOTE: WEIGHTS FOR INTERMEDIATE DIAPHRAGMS SHOWN ABOVE INCLUDE BOLTS AND CONNECTION PLATES.