Missouri Department of Transportation

Bridge Division

Bridge Design Manual

Section 3.53

Revised 04/26/2001

Click Here for Index

Index

3.53.1 Design

1.1 Single Column Design

3.53.2 Dimensions (Not Published)

3.53.3 Reinforcement

3.1 Web Reinforcement

3.53.4 Miscellaneous Details

4.1 Access Doors (Rectangle)
4.2 Access Doors (Oval)
4.3 Access Doors (Location)

SINGLE COLUMN DESIGN **Design**

Top Slab Modifications at Intermediate Bent:

The reinforcement shown below shall be used in place of the design slab steel.

① designed slab steel

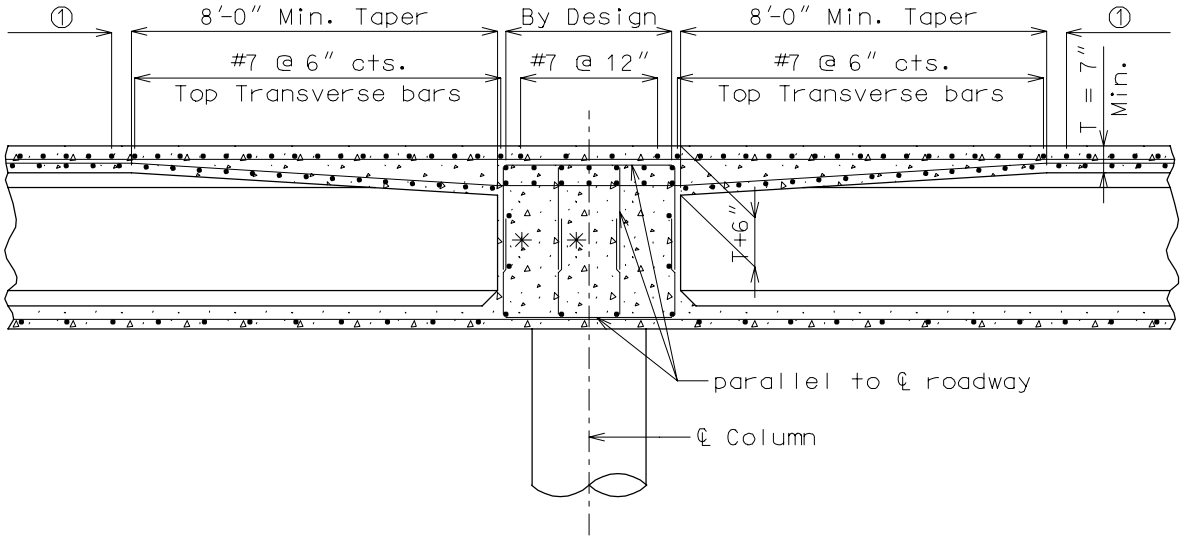

SECTION AT INT. BENT
(SINGLE COLUMN)

✳ Refer to 1973 AASHTO Article. 1.5.21 (C).

WEB REINFORCEMENT

Reinforcement

Top Slab Modifications at Intermediate Bent:

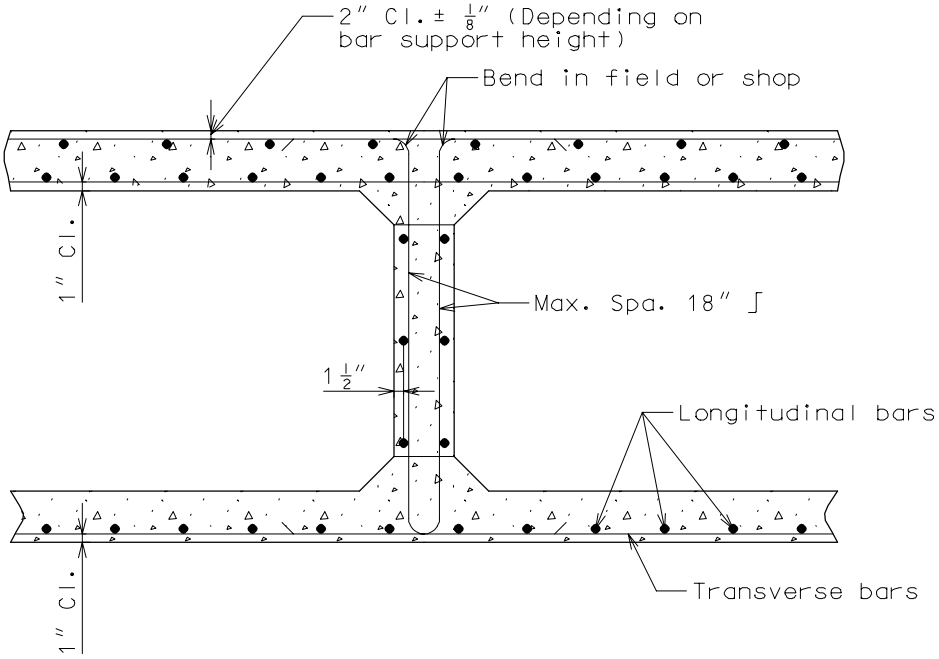

TYPICAL SECTION THRU WEB & SLABS

ACCESS DOORS (RECTANGLE) **Miscellaneous Details**

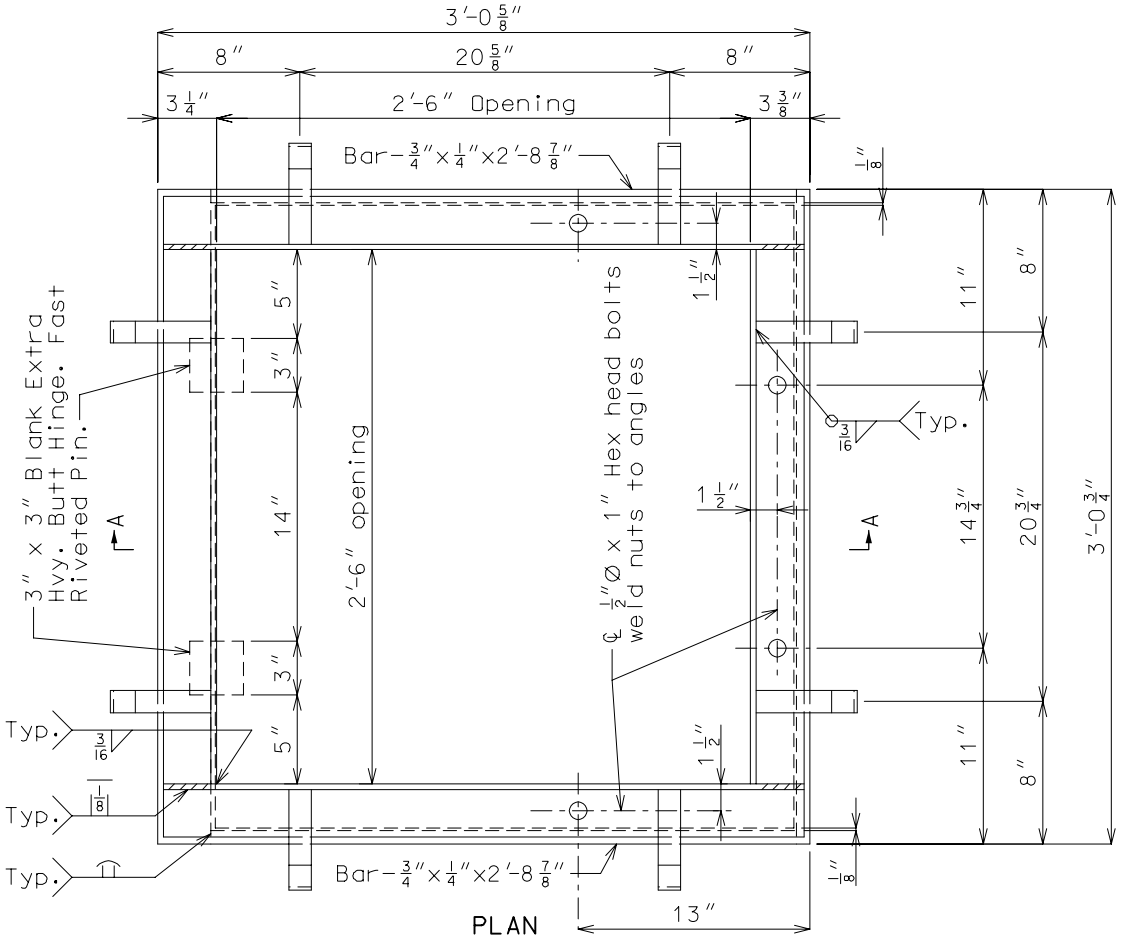

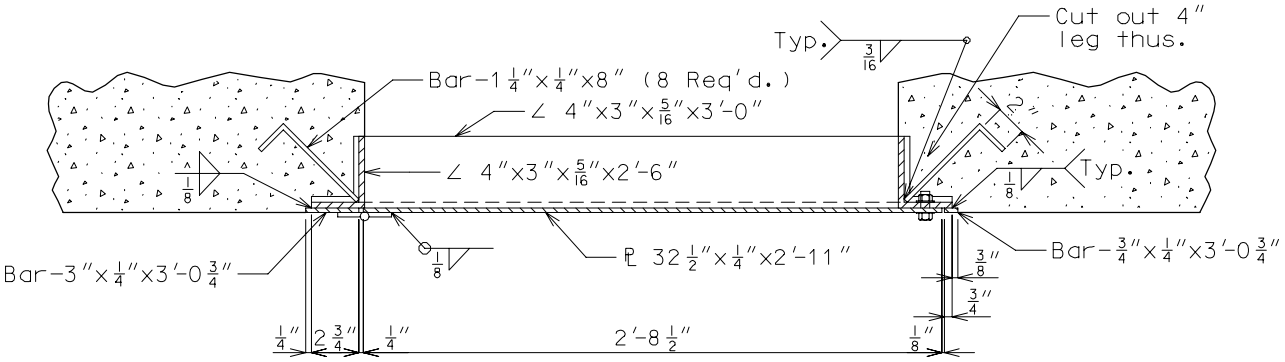

SECTION A-A

DETAILS OF ACCESS DOORS

WEIGHT 179#

ACCESS DOORS (OVAL)

Miscellaneous Details

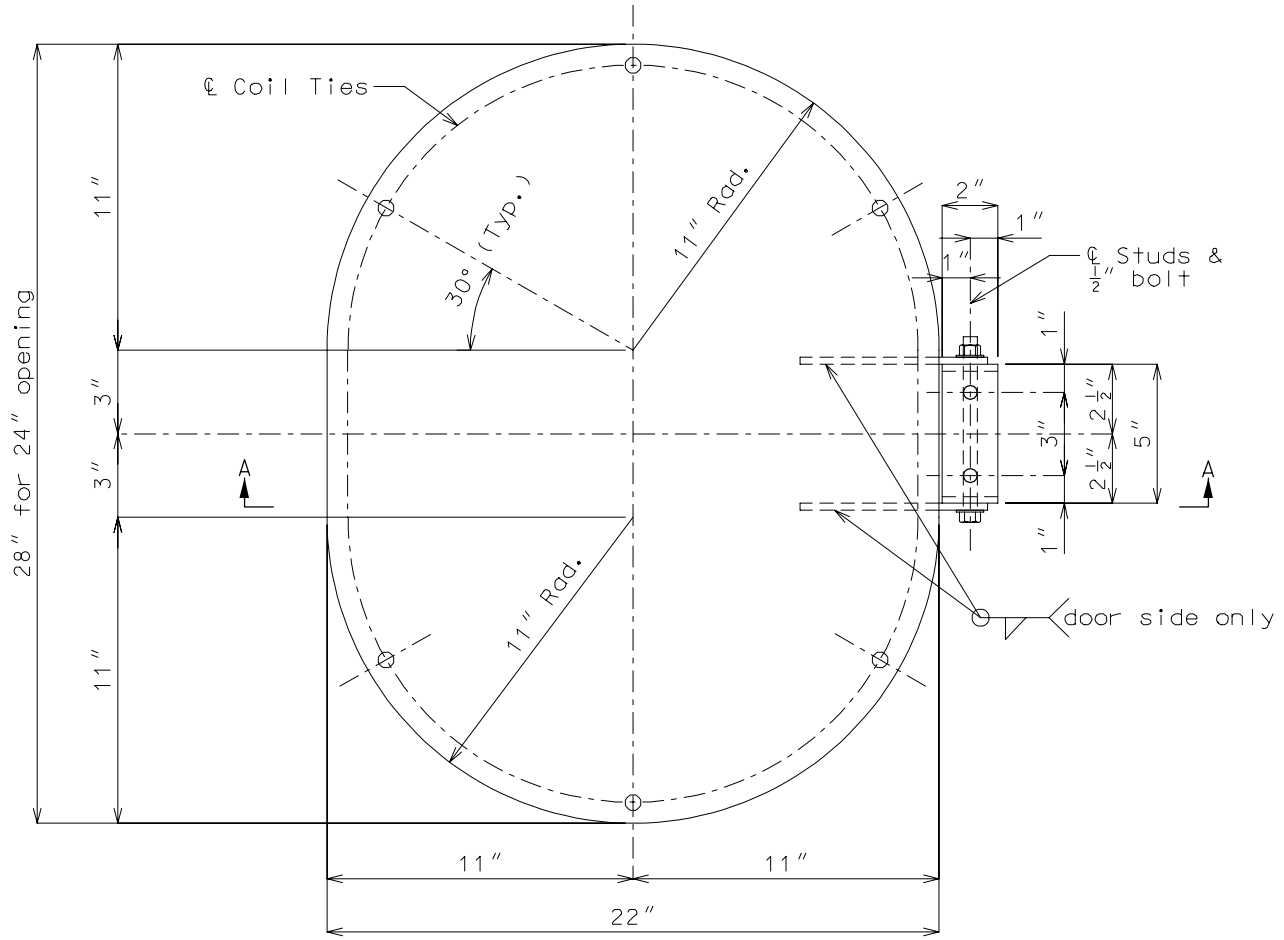

PLAN

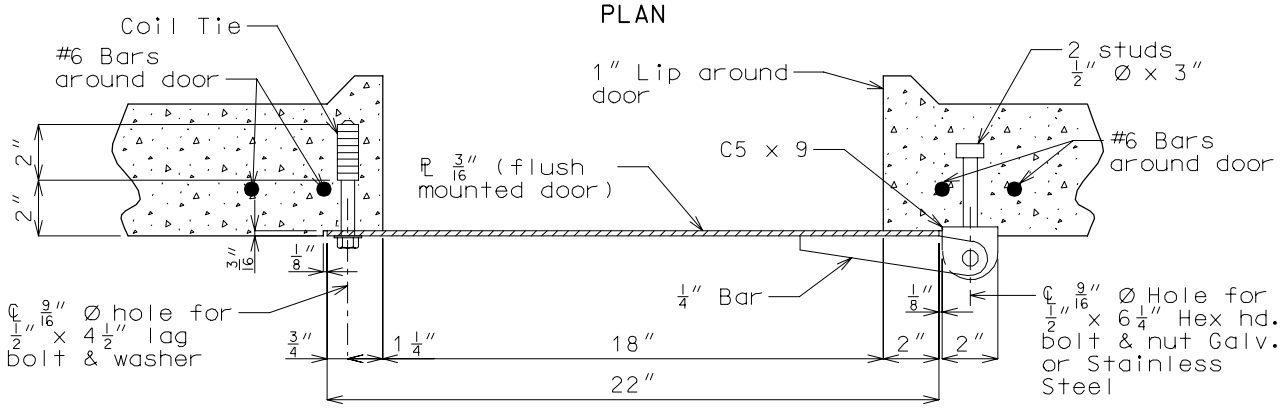

SECTION A-A

DETAILS OF ACCESS DOORS

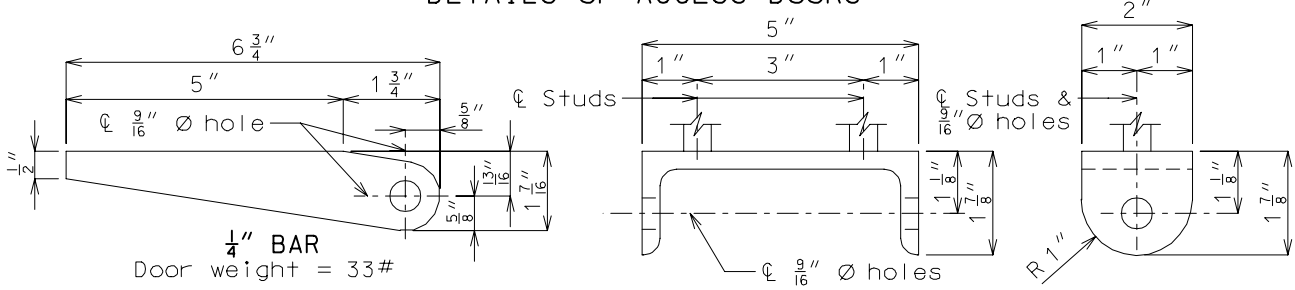

C5 x 9

See Section 4A for painting or galvanizing note.

ACCESS DOORS LOCATION

Miscellaneous Details

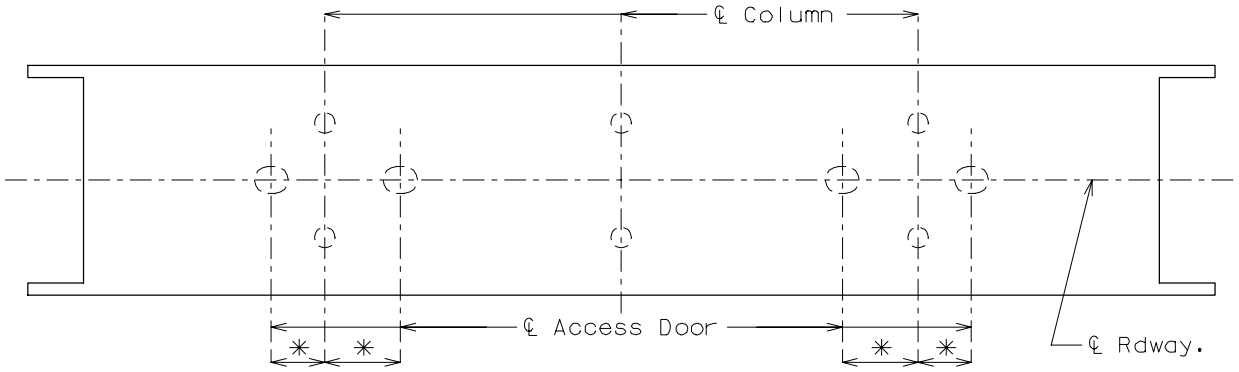

* Generally, access doors shall be positioned on or near 1/4 point of span and centerline of roadway.

It is permissible to shift postion of access doors when:
(1) Girder is located at centerline of bridge
(2) To prevent cutting additional slab bars
(3) To clear construction joints
(4) To maintain adequate vertical clearance

If possible, do not locate access doors over a roadway or berm.

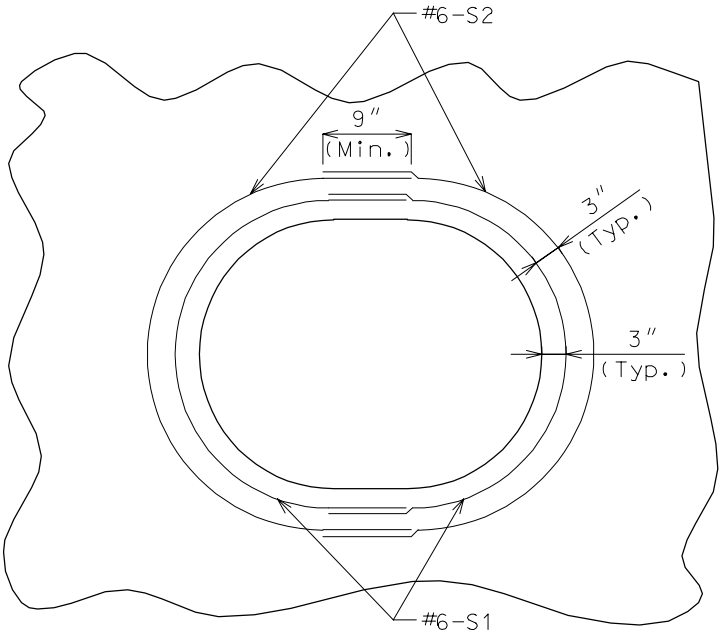

PLAN OF ACCESS DOOR
SHOWING REINFORCING

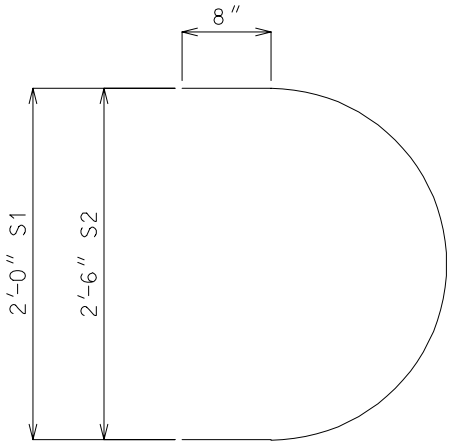

S1 = 4′-6″ long
S2 = 5′-3″ long