# Missouri Department of Transportation

# Bridge Division

# Bridge Design Manual

# Section 3.70

# Revised 04/04/2005

Click Here for Index

Index

3.70.1 Design

1.1 General, Unit Stresses and Loads (2 Sheets)
1.2 Vertical Loads
1.3 Horizontal Loads
1.4 Design Assumptions (5 sheets)
1.5 Pile Footings (3 Sheets)
1.6 Spread Footings

3.70.2 Dimensions (Except Concrete Deck Girder Type)

2.1 General (2 Sheets)
2.2 Beams and Columns
2.3 Footings
2.4 Tie Beams
2.5 Stub Bents (2 Sheets)
2.6 Construction Joints and Keys

3.70.3 Dimensions (Concrete Deck Girder Type)

3.1 General

3.70.4 Reinforcement (Except Concrete Deck Girder Type)

4.1 Beams
4.2 Wings
4.3 Backwall (2 Sheets)
4.4 Columns
4.5 Tie Beams
4.6 Pile Footings
4.7 Spread footings
4.8 Stub Bents - Non-Integral
4.9 Stub Bents - Sliding Integral

3.70.5 Reinforcement (Concrete Deck Girder Type)

5.1 Beam

## GENERAL

Use the Load Factor Design Method, except for footing pressure and pile capacity where the Service Load Design Method shall be used.

In some cases, the Service Load Design Method may be permitted on widening projects, see Structural Project Manager.

## DESIGN UNIT STRESSES (also see Section 4 - Note A1.1)

(1) Reinforced Concrete
Class B Concrete (Substructure) fc = 1,200 psi f'c = 3,000 psi
Reinforcing Steel (Grade 60) fs = 24,000 psi fy = 60,000 psi
n = 10
$Ec = W^{1.5} \times 33 \sqrt{f'c}$ (AASHTO Article 8.7.1) (✳)

(2) Reinforced Conrete (✳✳)
Class B-1 Concrete (Substructure) fc = 1,600 psi f'c = 4,000 psi
Reinforcing Steel (Grade 60) fs = 24,000 psi fy = 60,000 psi
n = 8
$Ec = W^{1.5} \times 33 \sqrt{f'c}$ (AASHTO Article 8.7.1) (✳)

(3) Structural Steel
Structural Carbon Steel (ASTM A709 Grade 36)
fs = 20,000 psi fy = 36,000 psi

(4) Pile Footings
For pile capacity, see Bridge Manual Sections 1.4 and 3.74. Also, see the Design Layout if pile capacity is indicated.

(5) Spread Footing
For foundation material capacity, see Bridge Manual Section 1.4. Also see the Design Layout for the allowable footing pressure.

(6) Overstress
The allowable overstresses as specified in AASHTO Article 3.22 shall be used where applicable for the Service Load Design Method.

(✳) Use W = 150 pcf, $Ec = 60{,}625 \sqrt{f'c}$
(✳✳) May be used for special cases, see Structural Project Manager.

## LOADS

(1) Dead Loads

See Bridge Manual Section 1.2 Loads.

(2) Live Loads

As specified on the Design Layout.

Impact of 30% is to be used for the design of beam and top of columns. No impact is to be used for the design of any other portion of the bent.

(3) Temperature and Frictional Forces

See Bridge Manual Section 1.2 Loads.

(4) Wind and Buoyancy Forces

These forces shall be disregarded, except for special cases, or by the Design Layout. See Manual Section 1.2. Loads.

(5) Earthquake Loads

All bridges in Seismic Performance Categories A, B, C & D are to be designed by earthquake criteria in accordance with this Bridge Manual. See Section 6.1 Seismic Design.

## DISTRIBUTION OF LOADS

(1) Dead Loads

Loads from stringers, girders, etc. shall be applied as concentrated loads at the intersection of the centerline of stringer or girder and the centerline of bearing. Loads from superstructure units, such as concrete slab spans, shall be applied as uniformly distributed loads at the centerline of bearing.

(2) Live Loads

Loads from stringers, girders, etc. shall be applied as concentrated loads at the intersection of the centerline of stringer or girder and the centerline of bearing.

For concrete slab spans, distribute two wheel lines over 10′-0″ (normal to centerline of roadway) of substructure beam. This distribution shall be positioned on the beam on the same basis as used for wheel lines in traffic lanes for substructure design (See Bridge Manual Section 1.2 Loads).

(3) Earthquake Loads

All bridges in Seismic Performance Categories A, B, C & D are to be designed by earthquake criteria in accordance with this Bridge Manual. See Bridge Manual Section 6.1 Seismic Design.

VERTICAL LOADS (✳)

DEAD LOADS & LIVE LOAD SURCHARGE

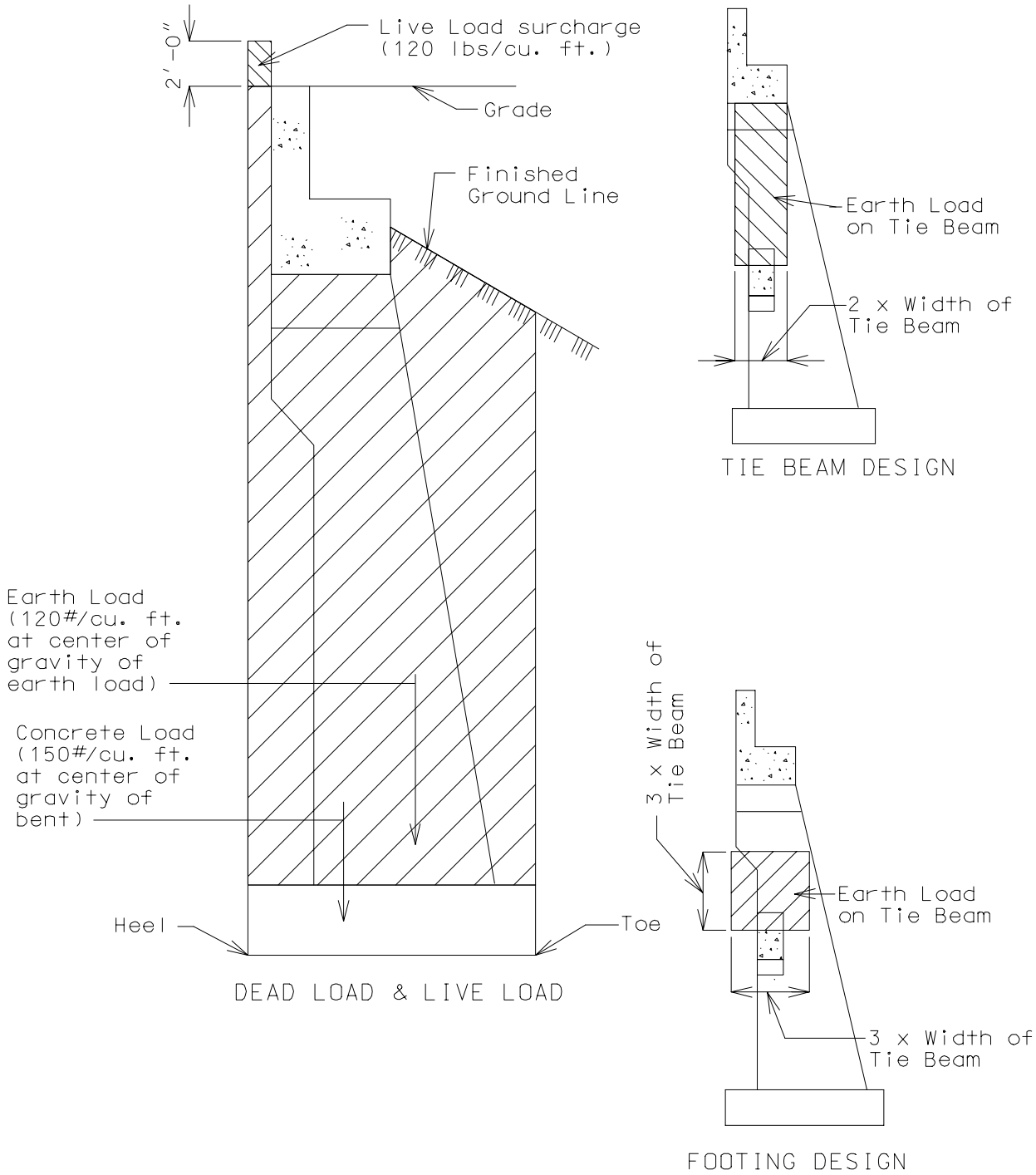


(✳) One half of the dead load of the approach slab shall be included in the vertical load.

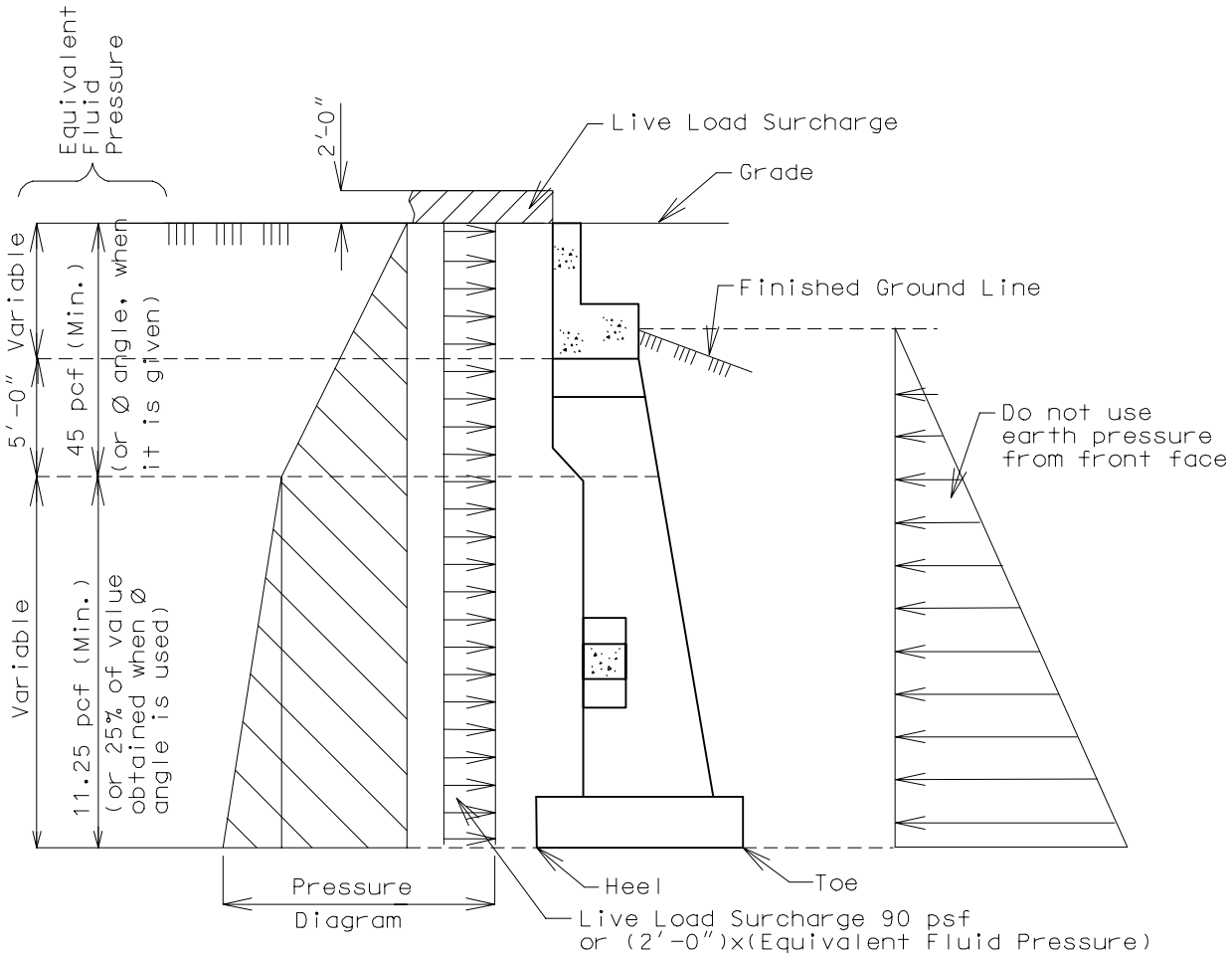


**EQUIVALENT FLUID PRESSURE & LIVE LOAD SURCHARGE**

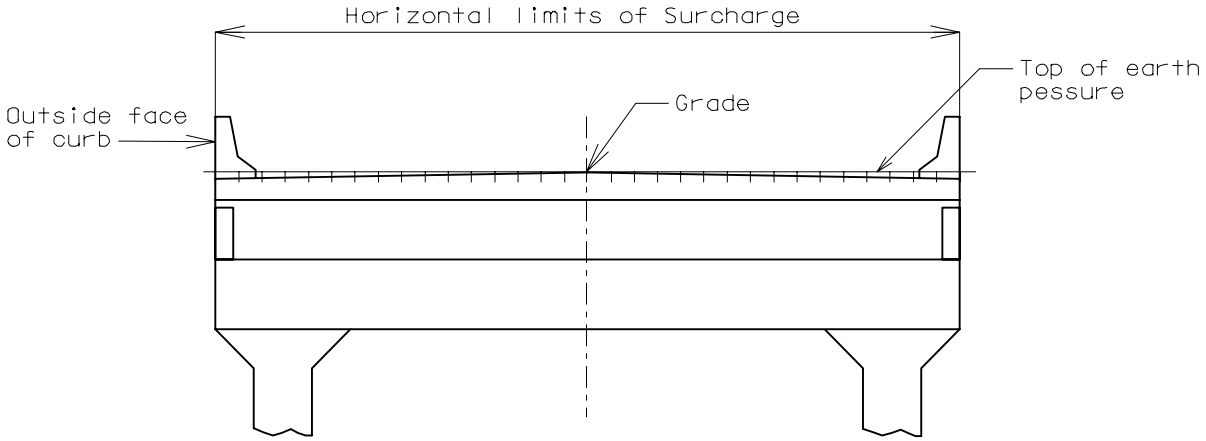


**LIMITS OF EARTH PRESSURE AND SURCHARGE**

Note: Use surcharge on the back of all columns, regardless of location.

DESIGN ASSUMPTIONS

Design

(1) BEAM

The beam shall be assumed continuous over simple supports for vertical and horizontal loads. One half of the dead load of the approach slab shall be included in the beam design. The effect of the vertical wing loads shall be considered in computing beam moments. The effective section for moment or shear shall be the beam only; the backwall above the beam will not be considered.

Beams for all types of bents, except the concrete deck girder type, may be assumed adequately reinforced for horizontal loads. Investigate reinforcing for horizontal loads for concrete deck girder type bents.

Reinforcement for negative moment shall be based on the moment at the centerline of column. Column haunches shall not be considered effective for analysis of shear reinforcing. Minimum shear reinfrocing shall be used in that area directly over the columns.

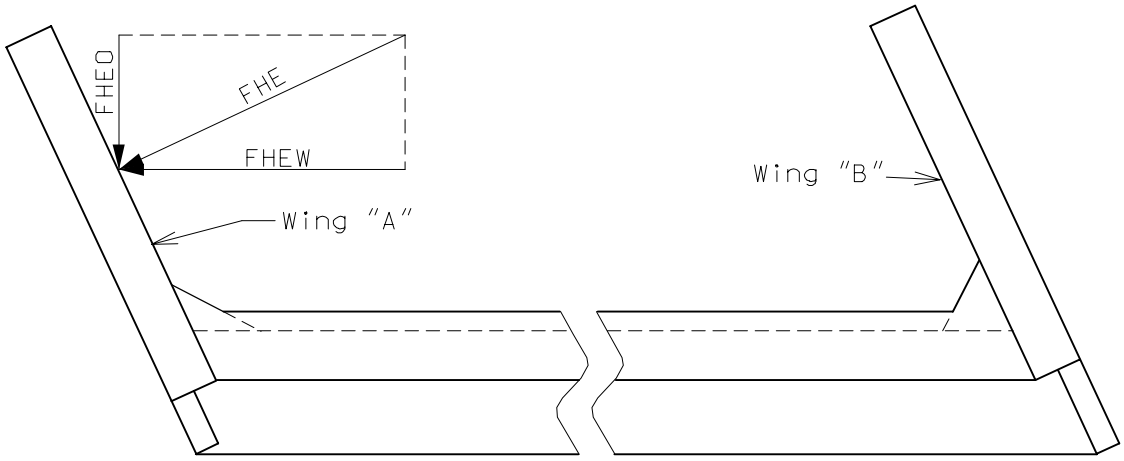


PART PLAN OF BEAM AND WINGS

DESIGN ASSUMPTIONS (CONT.)

Design

(2) WING AND BACKWALL

(a) Vertical Loads

The minimum steel placed horizontally in wings shall be #6 bars at 8″ centers, each face. These bars should be adequate to support the wing. For a wing with "Layout Length" greater than 17′-0″, use maximum of 10′-0″ rectangular wing wall combined with a detached wing wall (See Bridge Design Manual Section 3.76.1).

(b) Horizontal Loads

The force FHE, shown on the preceding page, represents the force of the horizontal earth applied to the wing at the centroid of the wing in a transverse direction. The forces FHEO and FHEW are components of the horizontal earth force. This procedure applies to Wing "A" and the results will be used for both wings.

The horizontal earth force designated FHE, will create a stress at the junction of the wing and backwall.

The minmum steel placed horizontally in the corner haunch at this junction shall be #6 bars at 8″ cts. For a wing with "Layout Length" greater than 17′-0″, use maximum of 10′-0″ rectangular wing wall combined with a detached wing wall (See Bridge Manual Section 3.76).

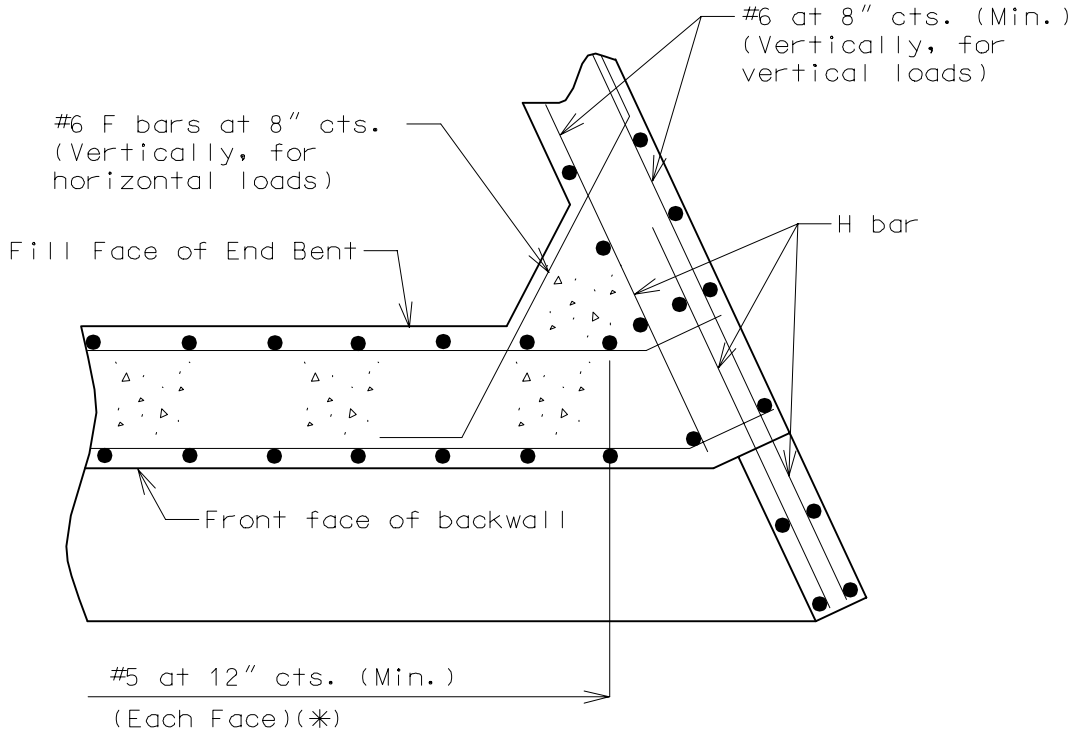


PART SECTION THRU BACKWALL AND WING

(✳) See page 4.3-2 of this section for backwall with "h" > 8′.

TIE-BEAMS

Tie-beams shall be assumed to have fixed ends for vertical and horizontal loads.

COLUMNS

Columns shall be considered fixed at the footings for horizontal loads. No transverse loads need to be considered, except for temperature forces on skewed bridges.

FOOTINGS

Horizontal Earth Loading

The cantilever effect of the wings, due to horizontal earth pressure on the wings, shall be considered as shown on the following sheets.

The results of the forces on the wings as shown on page 1.4-1 are to be applied to the footings as described herein.

The effect of the horizontal earth pressure on the backwall will be such as to create the maximum horizontal reaction that will govern the overturning design of the footing in question and shall be as shown on the following sheets.

DESIGN ASSUMPTIONS (CONT.)

FOOTINGS (CONT.)

(1) Horizontal Earth Loading (Cont.)
The horizontal earth loading shall be as shown below.

TWO FOOTINGS

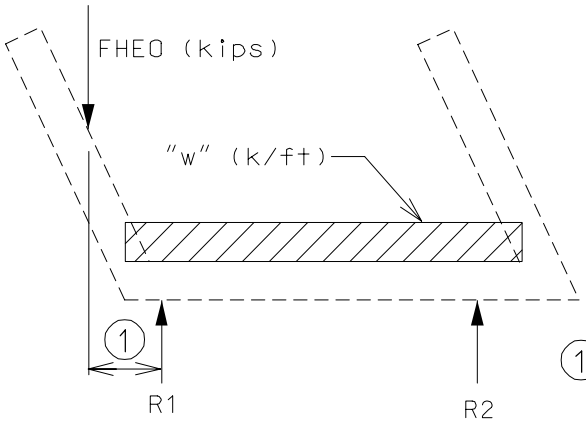


Compute R1 based on FHEO and "w" and use for both footings.

1 Distance between FHEO and R1.

FIGURE 1 TWO FOOTINGS

MULTIPLE FOOTINGS

For three or more footings, the same basic procedure will apply as shown above.
For exterior footings, use the force FHEO and the portion of the backwall loaded by "w" to create the maximum reaction as shown in Figure 2.

For interior footings, see Figure 3. Neglect FHEO and use "w" to create a maximum reaction for the footing under consideration.

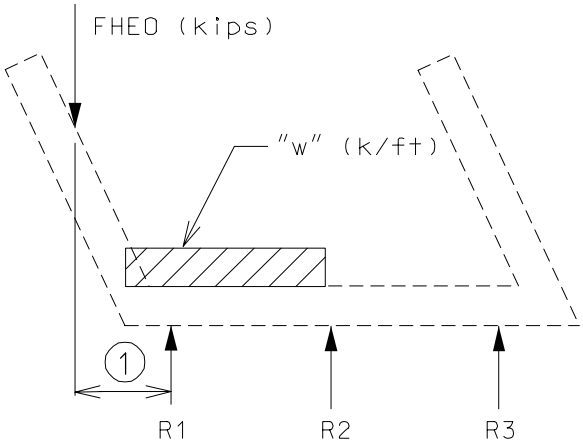


Compute R1 based on FHEO and "w", and use for both footings R1 or R3.

FIGURE 2 EXTERIOR FOOTINGS

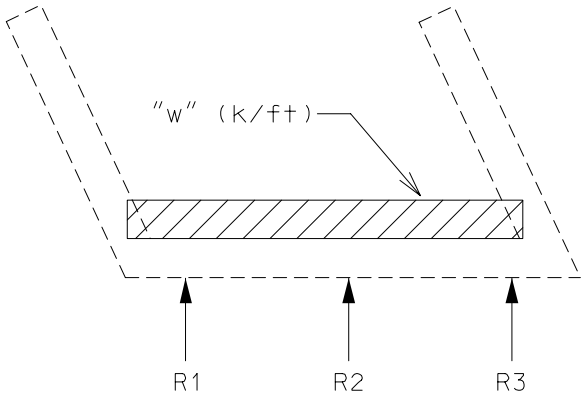


Compute R2 based on "w" only only. Neglect the effect of FHEO.

FIGURE 3 INTERIOR FOOTINGS

1 Distance between FHEO and R1.

DESIGN ASSUMPTIONS (CONT.)

FOOTINGS (CONT.)

(2) Surcharge

The horizontal force due to surcharge shall be applied to the backwall for footing design as shown below.

TWO FOOTINGS

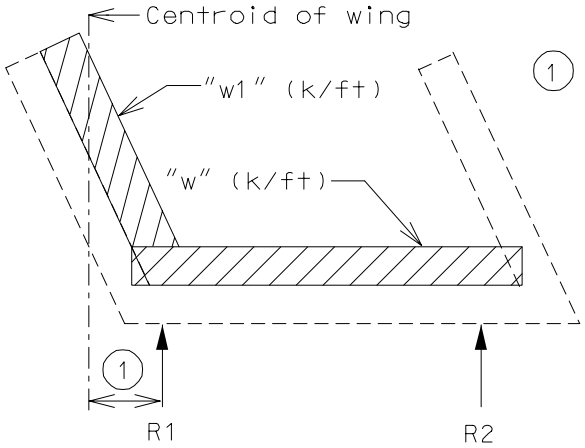


(1) Distance between ℄ Wing and R1

Compute R1 for loading as shown in Figure 4, and use for both footings. For Surcharge on the wing use the component force.

FIGURE 4 TWO FOOTINGS

MULTIPLE FOOTINGS

For three or more footings, load the span or portion of spans that will create the maximum reaction for the footing under consideration. See the figures below for examples.

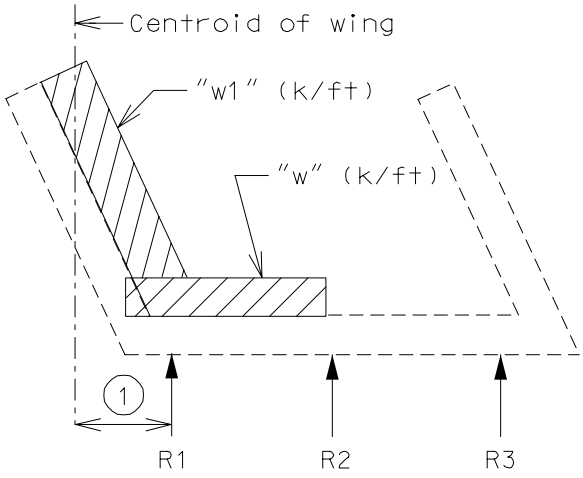


Compute R1 for loading as shown in Figure 5 and use for both footings R1 and R3. For Surcharge on wing, use the component force.

FIGURE 5 EXTERIOR FOOTINGS

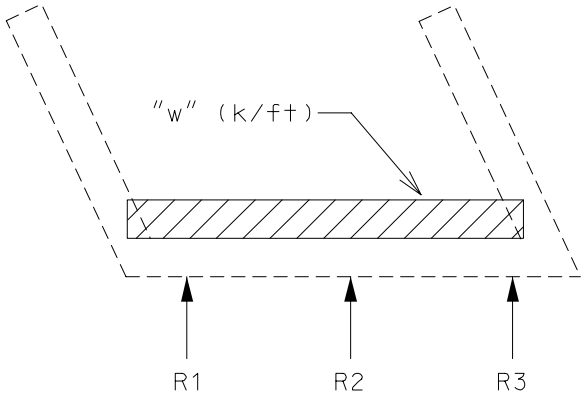


Compute R2 for loading as shown in Figure 6. Neglect the Surcharge on the wing.

FIGURE 6 INTERIOR FOOTINGS

(1) Distance between ℄ Wing and R1

## PILE FOOTINGS
Design

### GENERAL

(1) Piles

(a) Bending
Stresses in the piles due to bending need not be considered in design calculations except for seismic design.

(b) Dead Loads, etc.
Dead load of superstructure, substructure and one half of the approach slab will be distributed equally to all piles which are under the main portion of the bent.

(c) Pile Axial Load:
To calculate pile axial load, the neutral axis of pile group is determined based on the cross section on the bottom of the beam. The following four loading cases should be considered.

| Case | Vertical Loads | Horizontal Loads | Special Consideration |
|---|---|---|---|
| I | DL+E+SUR | EP+SUR | - |
| II | DL+LL+E+SUR | EP+SUR | - |
| III | DL+LL+E | EP | - |
| IV | DL+LL+E | None | Allow 25% overstress (✳) |

Where
LL = live loads;
DL = dead load of superstructure, substructure and one half of the approach slab;
SUR = two feet live load surcharge;
E = dead load of earth;
EP = equivalent fluid earth pressure;

Max. pile pressure = pile capacity
Min. pile pressure = 0 (tension on a pile will not be allowed for any combination of forces, except as noted.)(✳)

(2) Stability - Overturning of Bent (✳✳✳✳)

Only loading cases I and II are considered for the overturning check at toe pile 5'-0" below the bottom of the beam. There is no need to check overturning at heel pile (✳✳).

| Case | Point of Investigation | Vertical Loads(✳✳✳✳) | Horizontal Loads | Factor of Safety (✳✳✳) |
|---|---|---|---|---|
| I | Toe pile | DL+E | EP+SUR | 1.2 |
| II | Toe pile | DL+LL+E | EP+SUR | 1.5 |

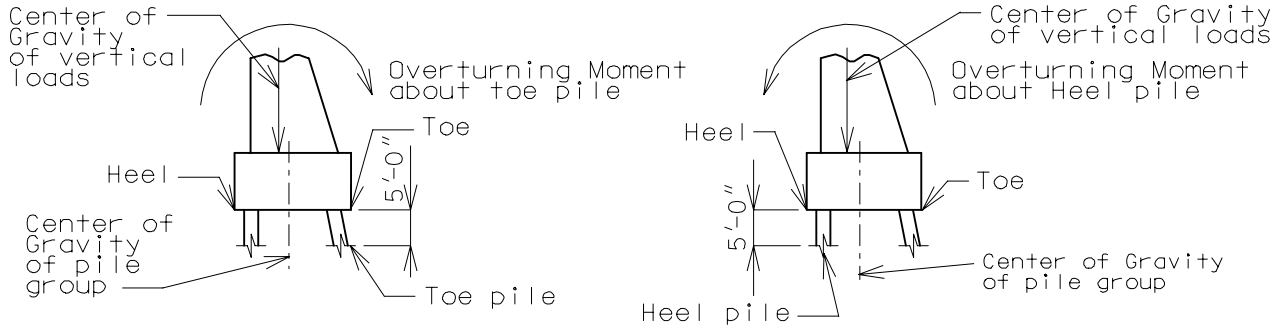


✳ 3 Tons/pile tension may be allowed on heel piles only. Zero allowed for all other cases.

✳✳ Overturning Moment about toe pile is significant and Overturning Moment about heel pile is insignificant.

✳✳✳ Factor of safety = $\frac{\text{resisting moment}}{\text{overturning moment}}$, don't include pile reactions when calculate resisting or overturning moment.

✳✳✳✳ Neglect vertical surcharge and approach slab dead load for overturning check.

## PILE FOOTINGS (CONT.)

## INTERNAL STRESSES

(A.A.S.H.T.O. Article 4.4 Modified)

### (1) Shear Line

If the shear line is within the column projected, the footing may be considered satisfactory for all conditions and standard #6 hairpin bars shall be used.

If the shear line is outside of the column projected, the footing must be analyzed and reinforced for bending and checked for shear stress (see following sheet, this Bridge Manual Section).

Footing depths may be increased, in lieu of reinforcement, if an increase would be more economical. (3'-6" Maximum depth, with 3" increments.)

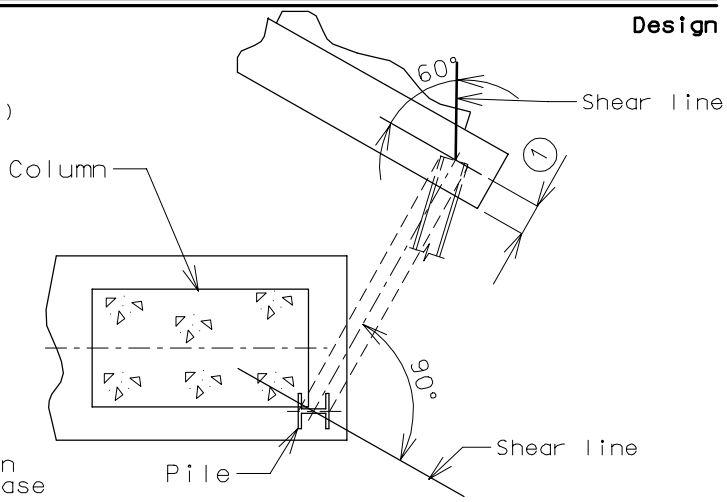


1 12" for SPC A, 18" for SPC B, C and D

### (2) Bending

The critical section for bending shall be taken at the face of the columns (concentric square of equivalent area for round columns).

The reinforcement shall be as indicated for reinforced footings, except that the standard #6 hairpin bars may be used for small footings in Seismic Performance Category A only if they provide sufficient steel area.

### (3) Distribution of Reinforcement

#### (a) Reinforcement in Bottom of Footing

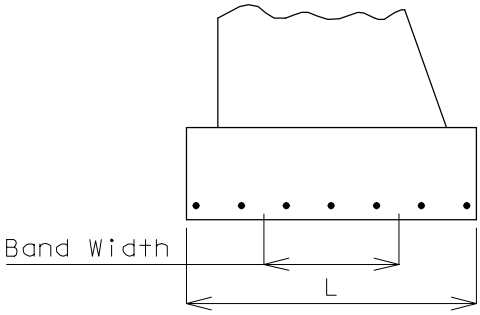


Band Width = Length of the short side of the footing.

L = Length of the long side of the footing.

Reinforcement of two way rectangular footings shall be distributed uniformly across the entire width of footing in the long direction. In the short direction, the portion of the total reinforcement given by AASHTO Equation 4.4.11.2.2-1 shall be distributed uniformly over a band width equal to the length of the short side of the footing.

$$\frac{\text{Reinforcement in band width}}{\text{Total reinforcement in short direction}} = \frac{2}{(\beta + 1)}$$

where $\beta$ = the ratio of the footing length to width

The remainder of the reinforcement required in the short direction shall be distributed uniformly outside the center band width of footing.

#### (b) Reinforcement in Top of Footing

Reinforcement in the top of the footing shall be provided based on a seismic analysis for Seismic Performance Categories B, C and D. This reinforcement shall be at least the equivalent area as the bottom steel in both directions. The top steel shall be placed uniformly outside the column.

PILE FOOTINGS (CONT.)

INTERNAL STRESSES (CONT.)

(4) Shear

(AASHTO Article 8.15.5 or 8.16.6)

The shear capacity of footing in the vicinity of concentrated loads shall be governed by the more severe of the following two conditions.

(a) Beam shear

Critical Section at "d" distance from face of column.

b = Footing width

Service Load

$v = V/(b\ d)$

$v_c = 0.95\sqrt{f'c}$

Load Factor

$v_u = V_u/(\varnothing\ b\ d)$

$v_c = 2.0\sqrt{f'c}$

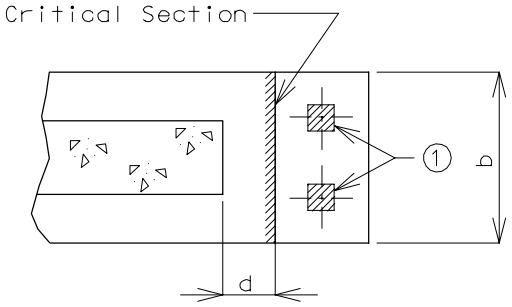


PART PLAN OF FOOTING

(b) Peripheral Shear

Critical Section at "d"/2 distance from face of column.

$b_0$ = the horizontal perimeter of a concentric vertical section through the footing at a distance, d/2, from each face of the column.

Service Load

$v = V/(b_0\ d)$

$v = 1.8\sqrt{f'c}$

Load Factor

$v = V_u/(\varnothing\ b_0\ d)$

$v_c = 4.0\sqrt{f'c}$

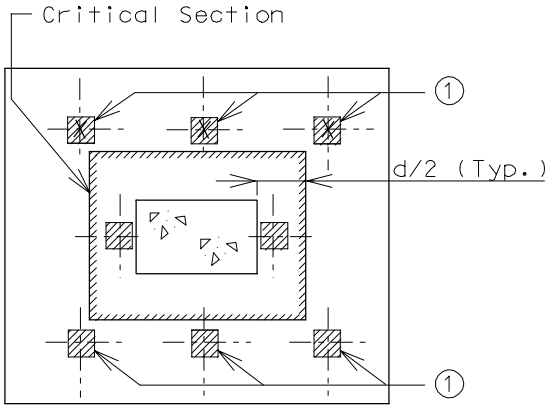


PLAN OF FOOTING

If shear stress is excessive, increase footing depth.

(1) Piles to be considered for shear. (Center of piles are at or outside the critical section.)

## SPREAD FOOTINGS

### GENERAL

Size of footing shall be determined by computing the position of the resultant and determining the bearing pressure by the Working Stress Design Method shown below.

| CASES OF LOADING | | | | |
|---|---|---|---|---|
| CASE | POINT OF INVESTIGATION | VERTICAL LOADS | HORIZONTAL LOADS | SPECIAL CONSIDERATION |
| I | Toe | DL+SUR+E | EP+SUR | --- |
| II | Toe | DL+LL+SUR+E | EP+SUR | --- |
| III | Heel | DL+LL+E | EP | --- |
| IV | Heel | DL+LL+E | NONE | 25% ALLOWABLE OVERSTRESS (✳) |

(✳) Position of resultant need not be checked.

DL = Dead Loads (Superstructure and/or Substructure including one half of the dead load of the approach slab)
LL = Live Loads
SUR = 2 ft. Live Load Surcharge
E = Dead Load of Earth
EP = Equivalent Fluid Earth Pressure

Internal stresses, in general, need not be investigated unless the shear line is outside of the column projected. Check the position of the shear line and proceed as specified.

The width of footings can generally, be held to the minimums indicated, except where excessive lengths are required. Design of footings on material with low bearing capacity may require increases in width.

### DESIGN AND ANALYSIS

See Section 3.71 subsection 3.71.6 of this manual.

## GENERAL

Dimensions (Except Deck Girder)

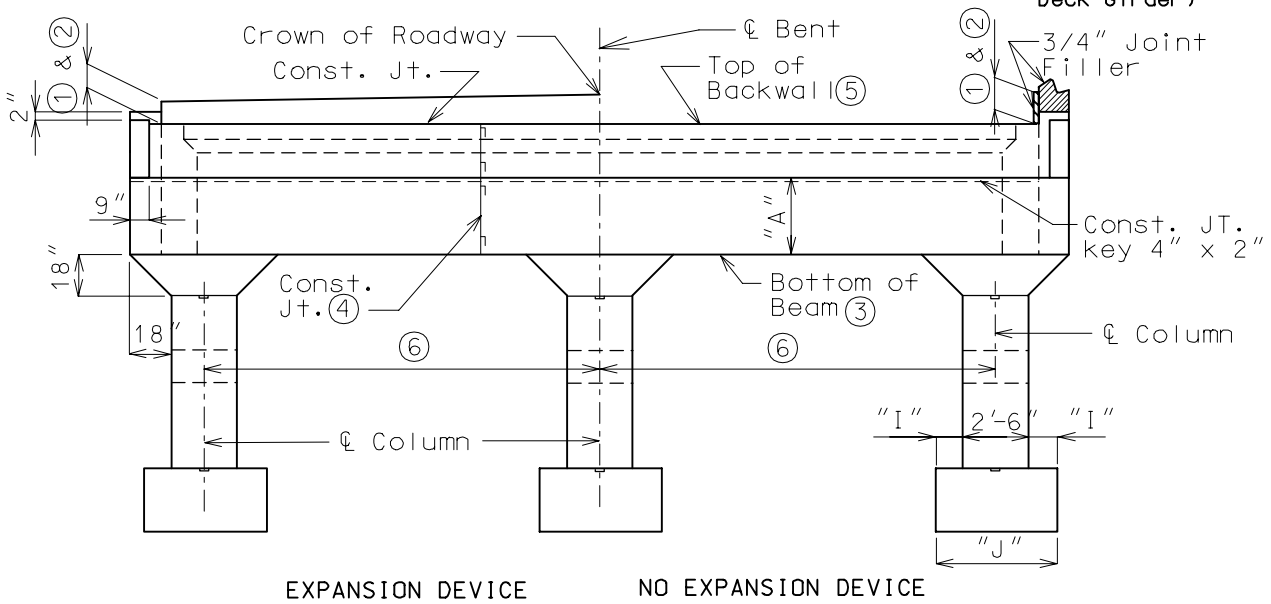


ELEVATION

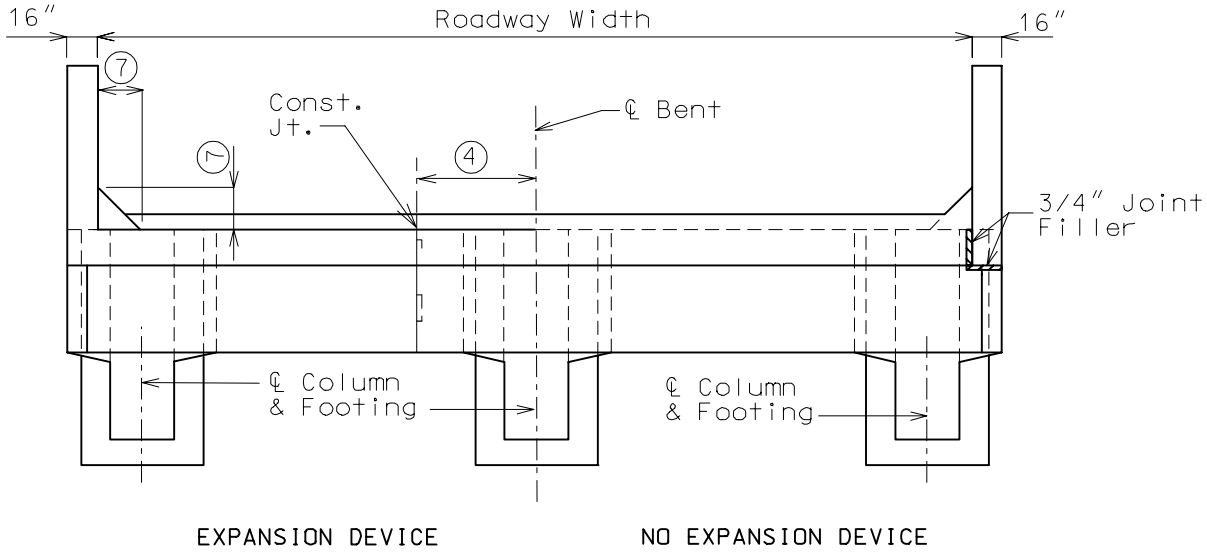


PLAN

1. 12" (Min.) at Fill Face (Top of concrete)
2. Slope backwall if bridge is superelevated or 1 exceeds 18"(±).
3. Step or slope bottom of beam if beam depth becomes excessive, see Structural Project Manager.
4. When total length of beam and backwall exceeds 60'-0", use a keyed constuction joint at or near a 1/4 point between columns.
5. Two-layers 50# roofing felt when there is no Expansion Device at the End Bents.
6. 28'-0" (Max.) with 1" increments. Use additional columns as required.
7. See Bridge Manual Section 3.76 subsection 2.3 Wing Brace Details.

Note: For dimensions A, I and J see pages 2.2-1 & 2.3-1 this section.

GENERAL(CONT.)

Dimensions (Except Deck Girder)

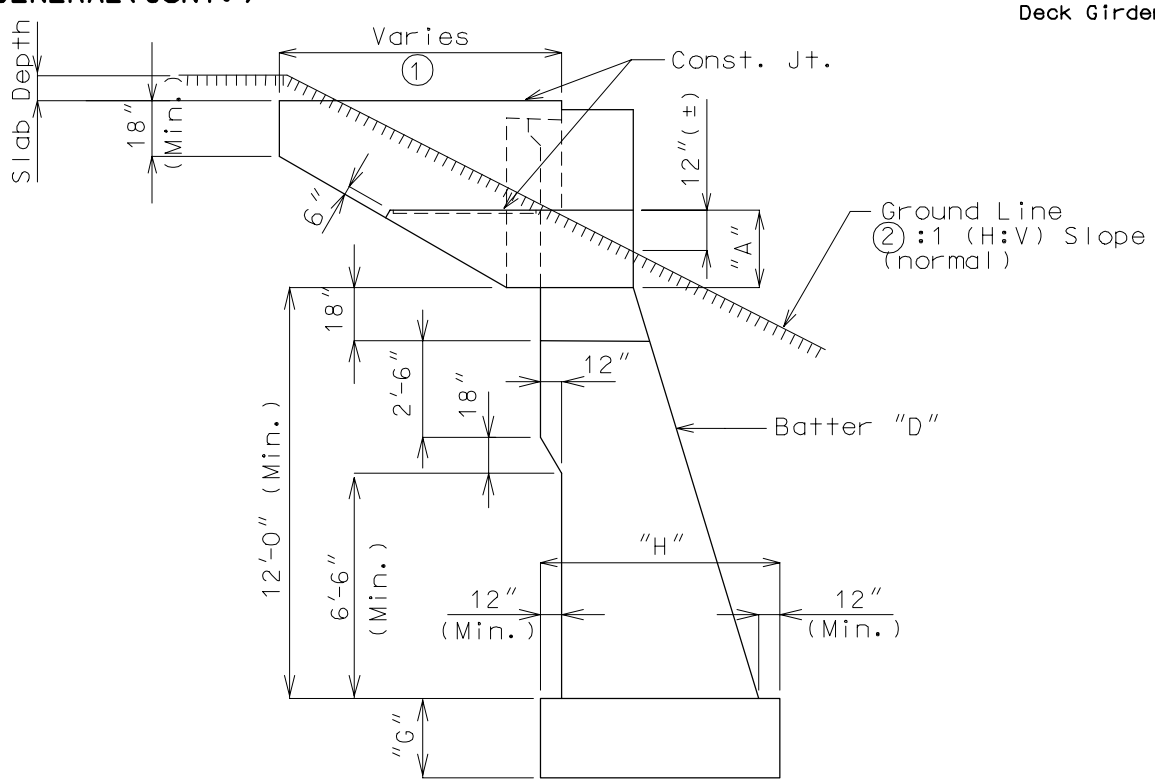


SIDE ELEVATION (12' AND OVER)

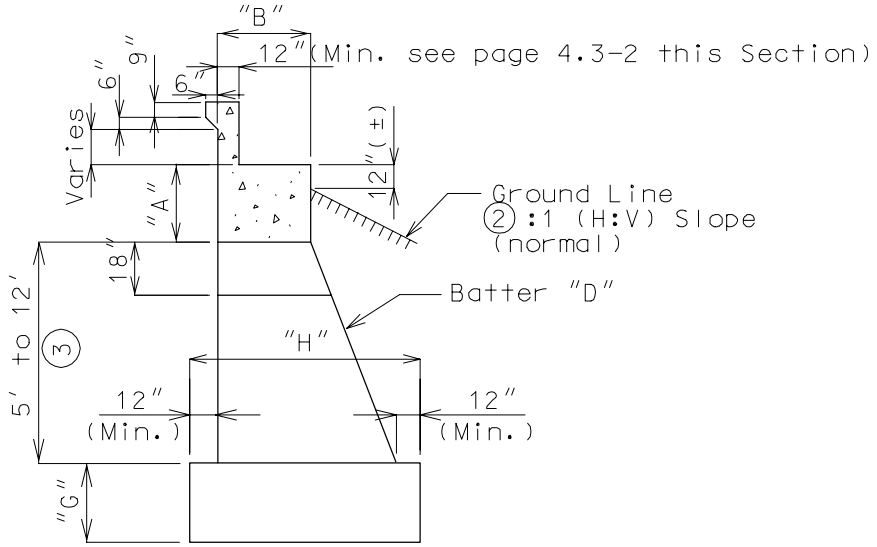


SECTION THRU BEAM (5' THRU 12')

1. Wing length shall be rounded to the next higher foot. See Design Layout for length of wing to Fill Face.

   For a wing with "Layout Length" greater than 17'-0" use a maximum of 10'-0" rectangular wing wall combined with a detached wing wall (See Section 3.76.1).

2. See Design Layout for maximum slope of spill fill.

3. If under 5'-0", use stub bent. (See this Manual Section.)

Note: For dimensions A, B, D, G and H see pages 2.2-1 and 2.3-1 this Section.

## BEAMS AND COLUMNS

Dimensions (Except Deck Girder)

## BEAMS

### DIMENSION "A" (DEPTH)

As required by design with 2'-6" as a minimum.
Increase by 3" increments as required.

### DIMENSION "B" (WIDTH)

As determined by superstructure requirements with a minimum of 2'-6".
Increase by 1" increments as required.

### DIMENSION "C" (LENGTH)

Should be taken to the next larger 1/2" so that the total column spacing is to the nearest one inch.

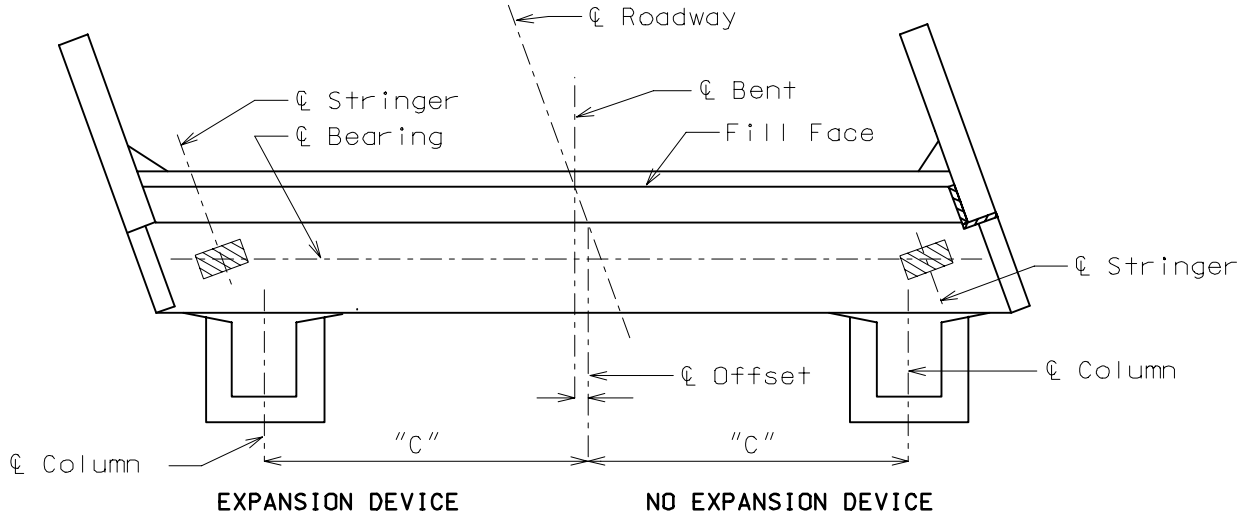


PLAN

## COLUMN

### DIMENSION "D" (BATTER)

Column Front Face
D = 3" per 12" minimum (no limit).

Column Fill Face
D = normally vertical, batter if required by design.

## FOOTINGS

Dimensions (Except Deck Girder)

### DIMENSIONS "G", "H", "I" AND "J"

### PILE FOOTINGS

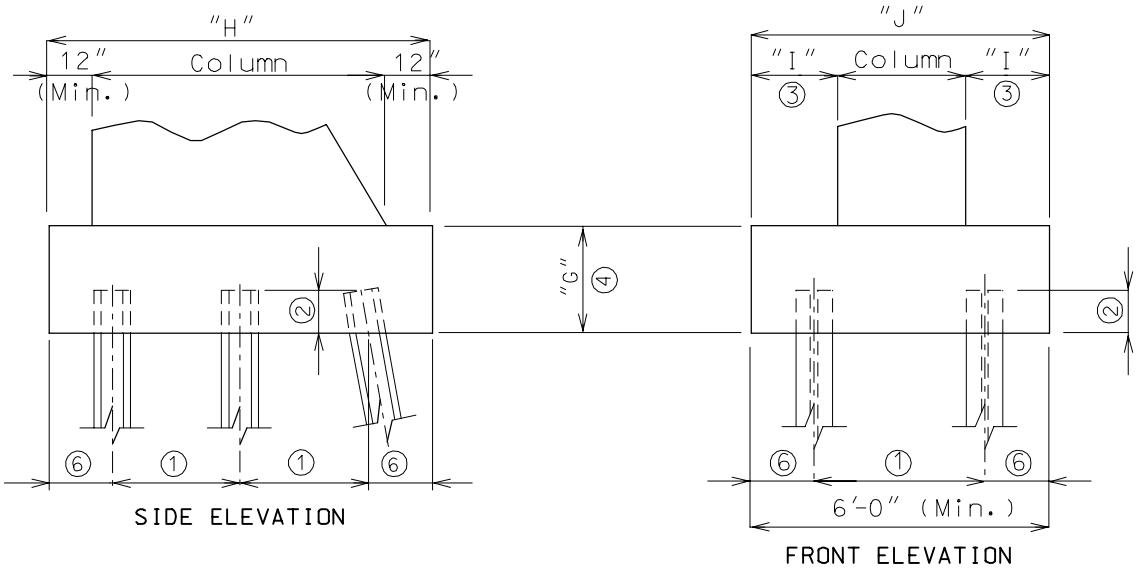


### SPREAD FOOTINGS (ROCK, SHALE, CLAY, ECT.)

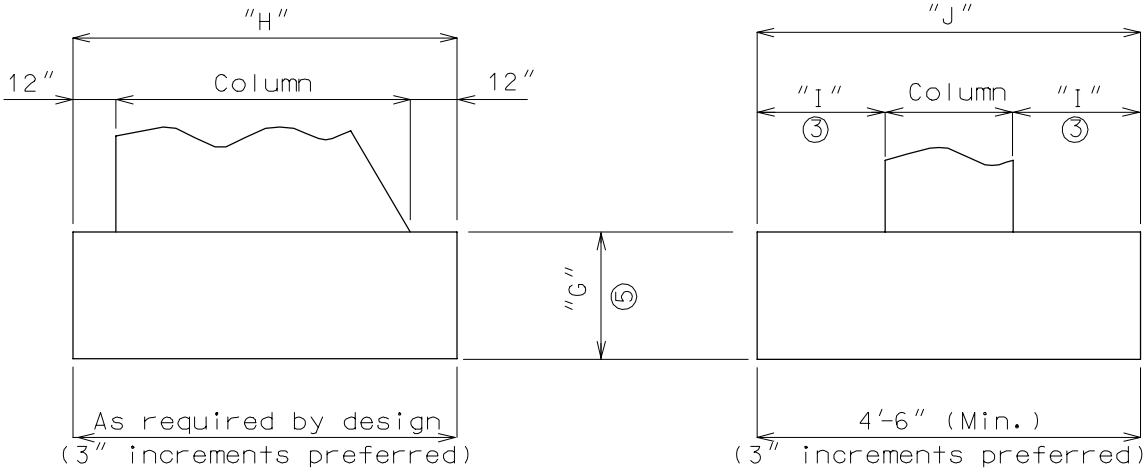


① 3'-0" (Min.) & 6'-0" (Max.) for steel HP piles and 14" CIP piles, AASHTO Article 4.5.6.4 shall be considered if piles are situated in cohesive soils 3D(Min.) and 6D (Max.) for 20" and 24" CIP piles(D = pile diameter).

② 12" for seismic performance category A,
18" for seismic performance category B, C and D

③ 12" (Min.)

④ For friction pile footings:
G= 2'-6" (Min.) for SPC A,
3'-0" (Min.) for SPC B, C & D (at 3" increments)

For steel pile footings:
G= 3'-0" (Min.) for SPC A,
3'-6" (Min.) for SPC B, C & D (at 3" increments)

⑤ G= 2'-6" (Min.) at 3" increments

⑥ Use 18" for steel HP piles and 14" CIP piles.
Use 21" for 20" and 24" CIP piles.

Note: Superbase shall not be used, except in special cases.

## TIE-BEAMS

Dimensions (Except Deck Girder)

Use a tie-beam, if approved by the Structural Project Manager when the distance from the bottom of beam to natural ground exceeds 20′ or when the distance from the bottom of beam to top of footing exceeds 30′.

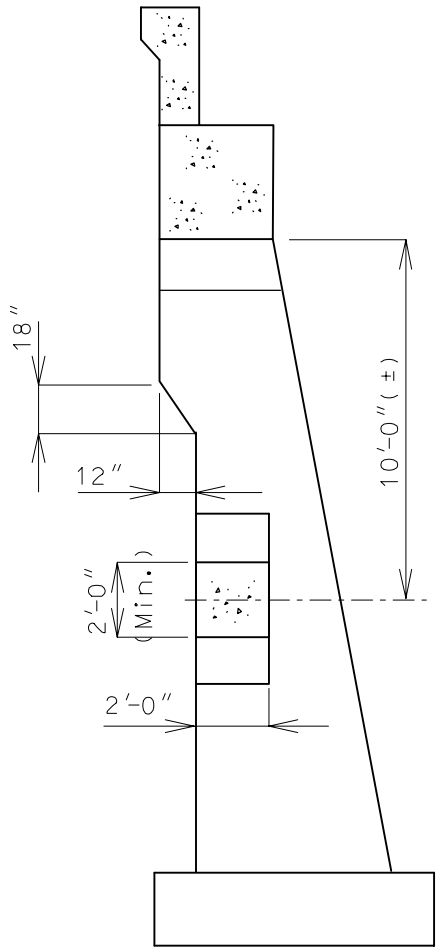


PART SECTION

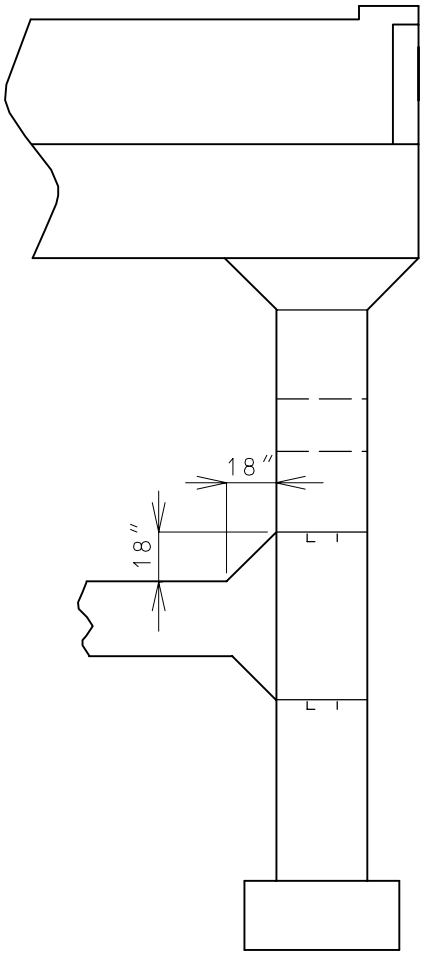


PART ELEVATION

**CONSTRUCTION JOINTS AND KEYS**

Dimensions (Except Deck Girder)

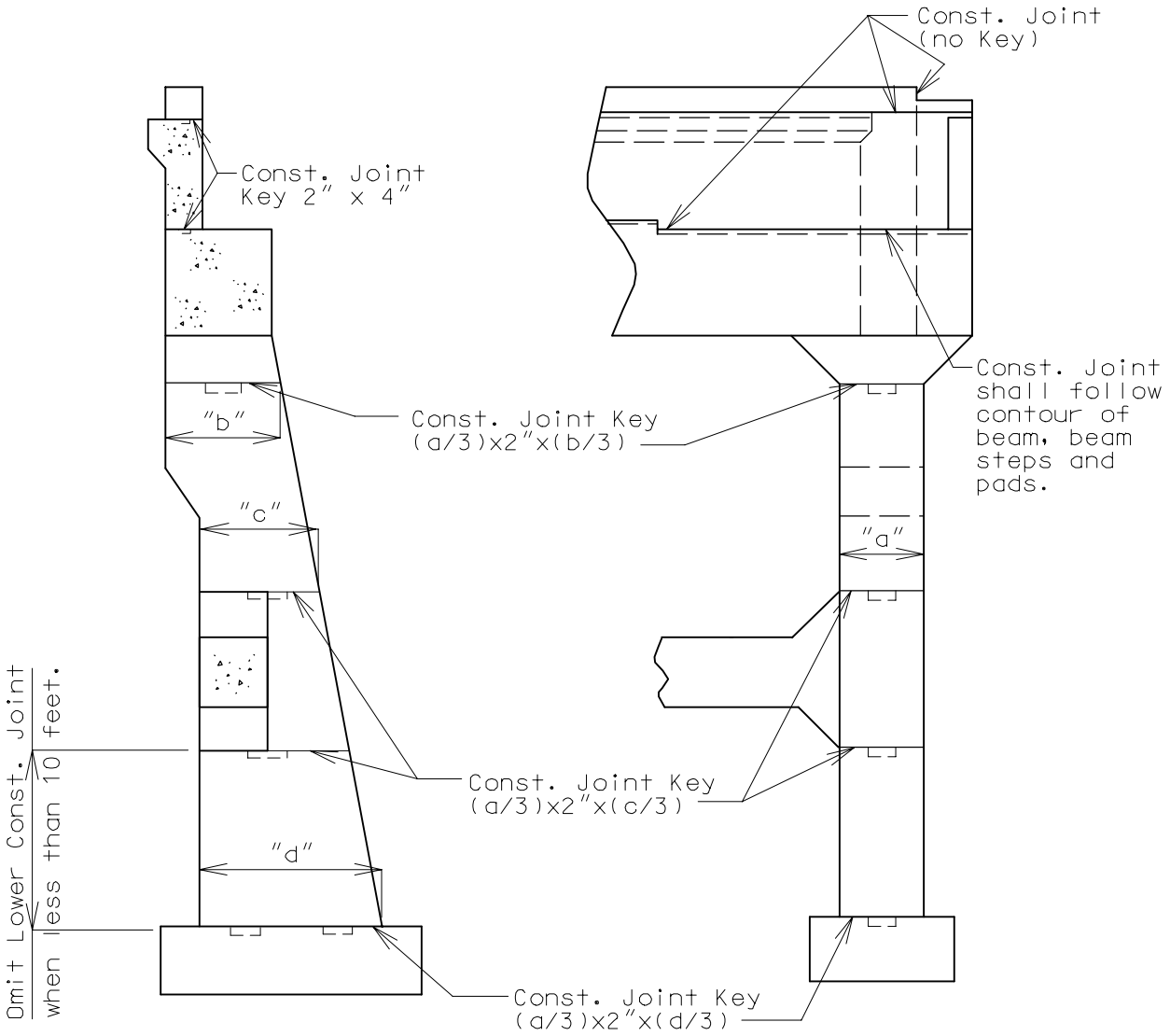


Note:
Maximum key length = 2'-0"
For multiple keys, make total key length equal to d/3.

## GENERAL

Dimensions (Conc. Deck Girder)

Note:
For details not covered here, see pages in subsection 3.70.2 (dimensions for other types of girders.

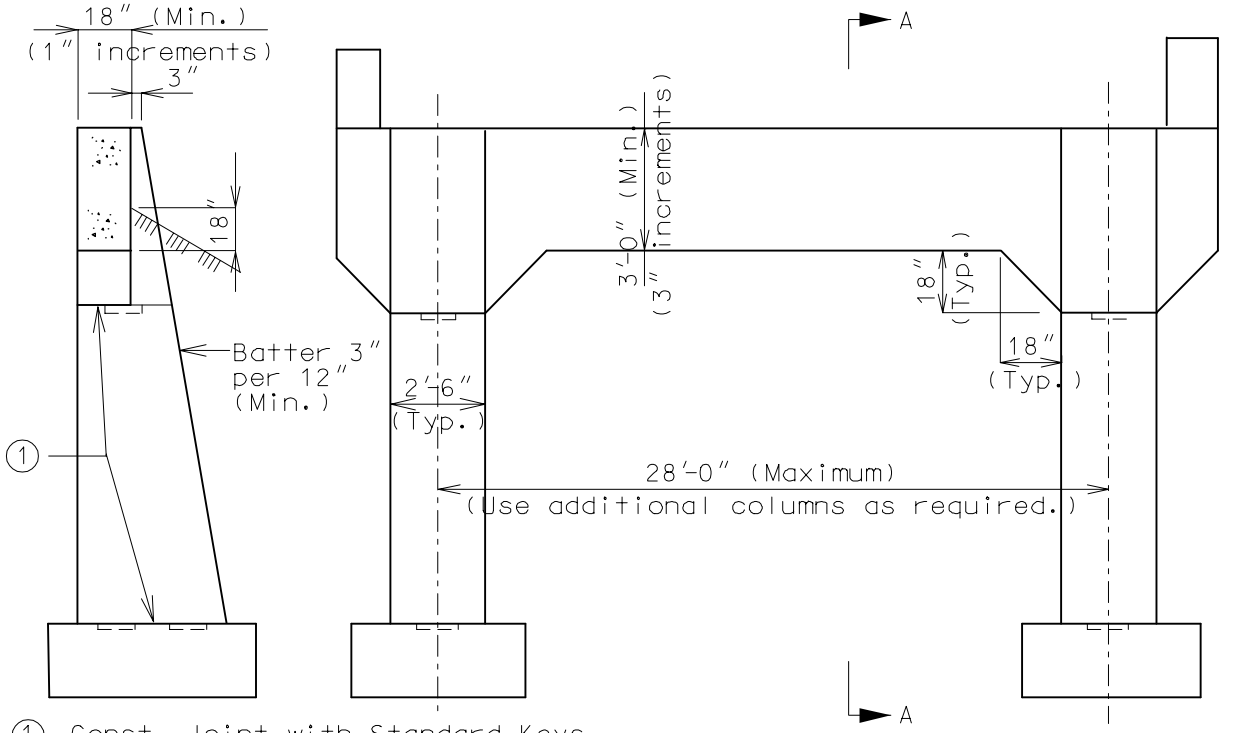


1 Const. Joint with Standard Keys

SECTION A-A

ELEVATION

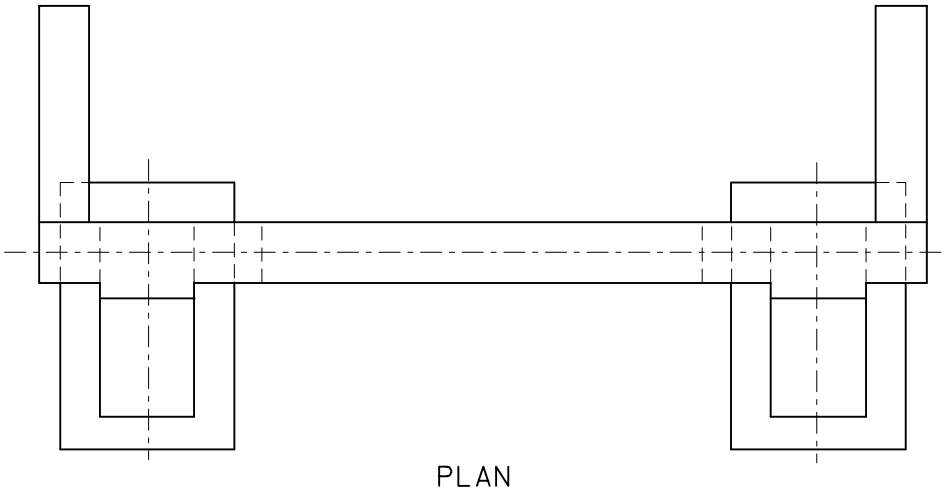

PLAN

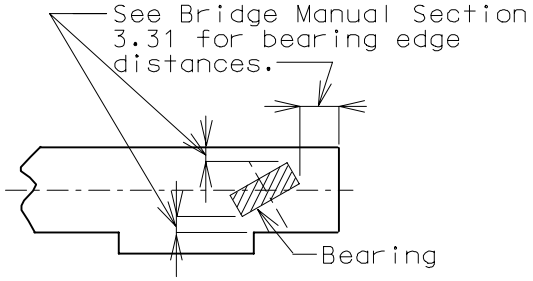


BEARING EDGE DISTANCES

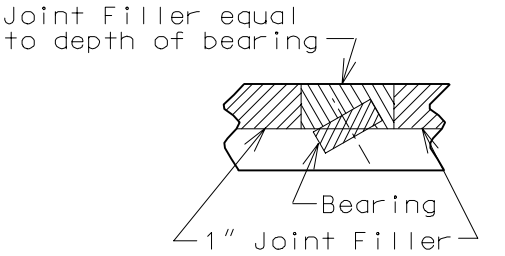


JOINT FILLER ON BEAM

## BEAMS

Reinforcement(Except Deck Girder)

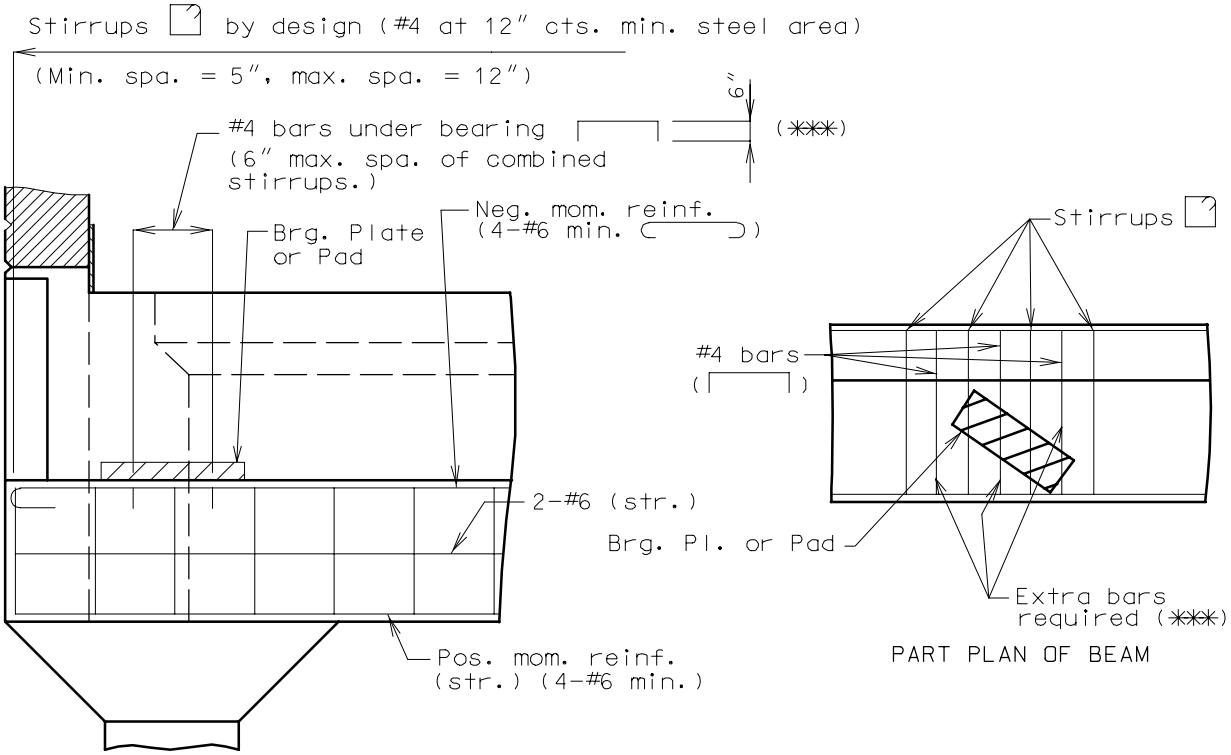


PART ELEVATION OF END BENT

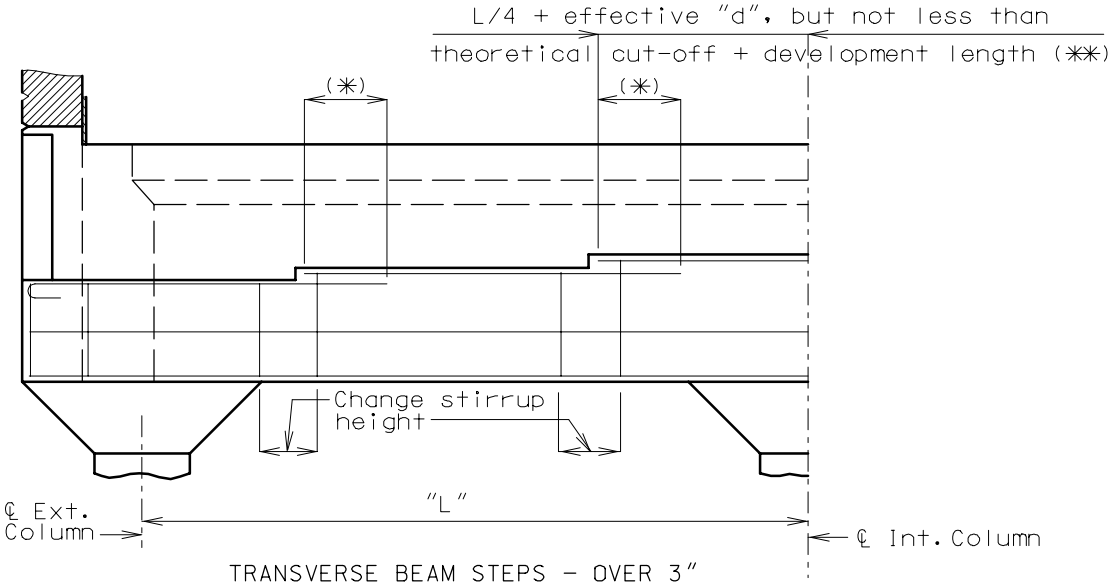


TRANSVERSE BEAM STEPS - OVER 3"
(Also, steps accumulating over 3")

Note:
Epoxy coat all reinforcement in end bents with expansion devices. See section 3.35 page 5.4-1 for details of protective coating and sloping top of beam to drain.

(*) See Bridge Manual Section 2.4 for lap splices.

(**) Minimum distance for steel in this plane to be considered effective for negative moment.

(***) #4 bars are not required for Double-Tee structures.

## WINGS

Reinforcement (Except Deck Girder)

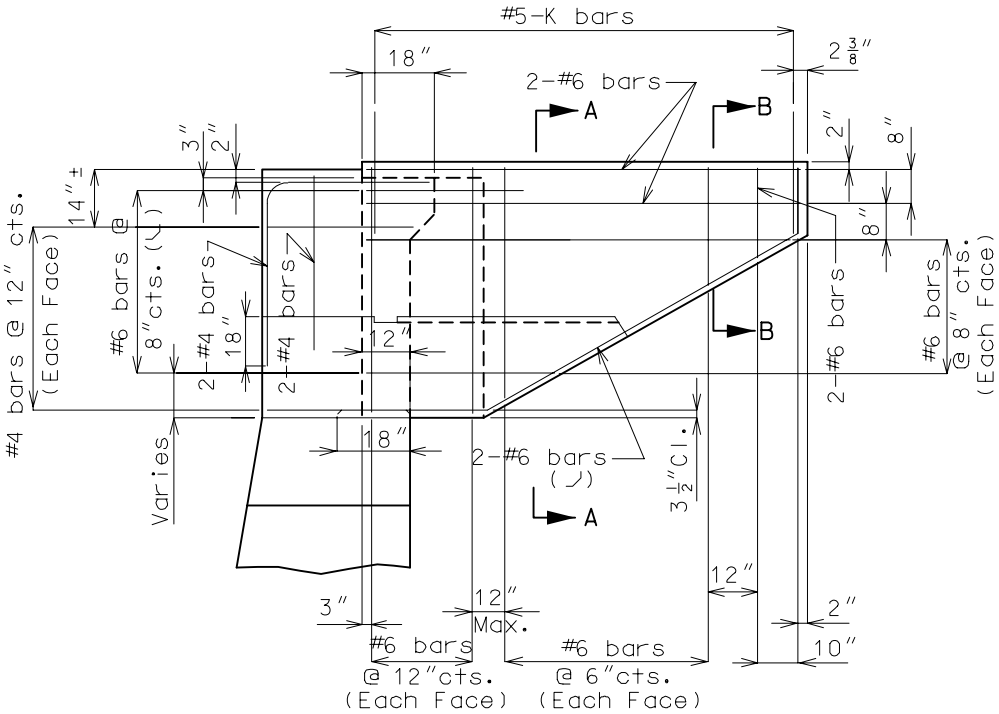


TYPICAL ELEVATION OF WING (1)

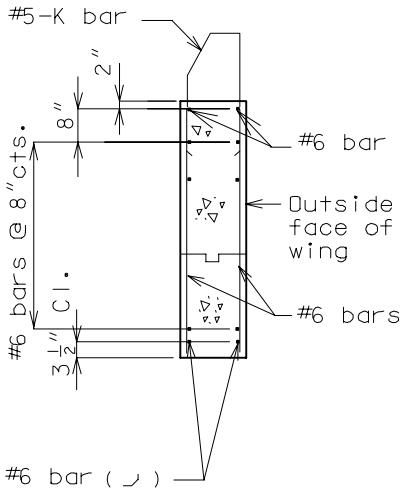


SECTION A-A

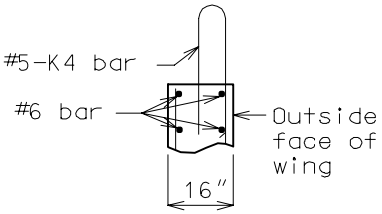


PART SECTION B-B

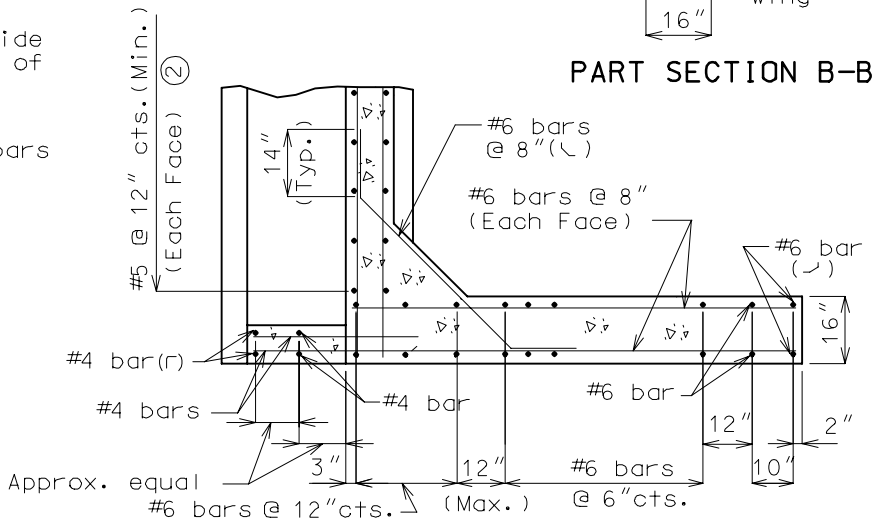


HORIZONTAL SECTION THRU WING
(K bars not shown for clarity)

Note:
For spacing of K bars in safety barrier curb, see Bridge Manual Sec. 3.30.

(1) When wing length is greater than 17'-0" use maximum of 10'-0" rectangular wing wall combined with a detached wing wall. See section 3.76 Non-Integral End Bents.

(2) See page 4.3-2 of this section for backwall with height "h" > 8'.

BACKWALL(NON-INTEGRAL)

Reinforcement (Except Deck Girder)

(✱✱✱) Bar length equals approach haunch length.

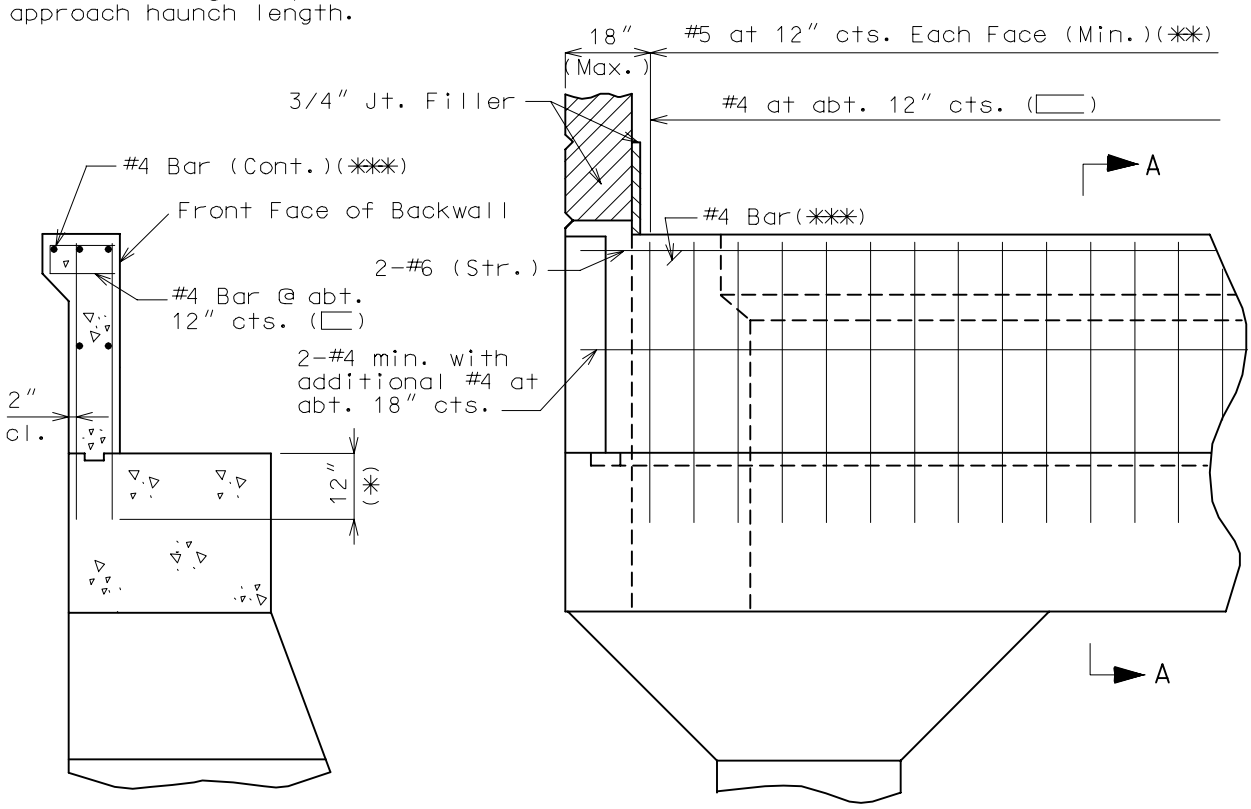


SECTION A-A

PART ELEVATION (NO EXPANSION DEVICE)

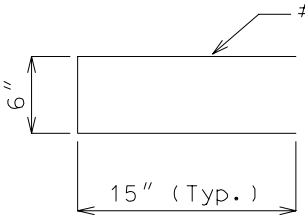


SHAPE 10

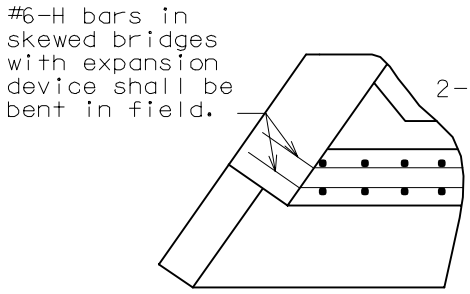


PART SECTION B-B

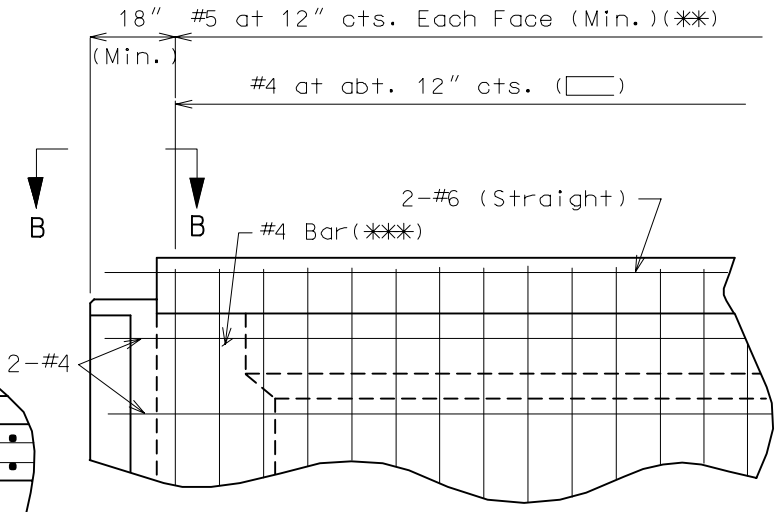


PART ELEVATION (EXPANSION DEVICE)

Note: Epoxy coat all reinforcement in end bents with expansion devices. See section 3.35 page 5.4-1 for details of protective coating and and sloping top of beam to drain.

(✱) See development length (Manual Section 2.4) if other than #5 bar.

(✱✱) See page 4.3-2 of this Manual Section for a backwall with "h" > 8′.

BACKWALL (NON-INTEGRAL) (CONT.)

**Reinforcement (Except Deck Girder)**

Note: Epoxy coat all reinforcement in end bents with expansion devices. See section 3.35 page 5.4-1 for details of protective coating and sloping top of beam to drain.

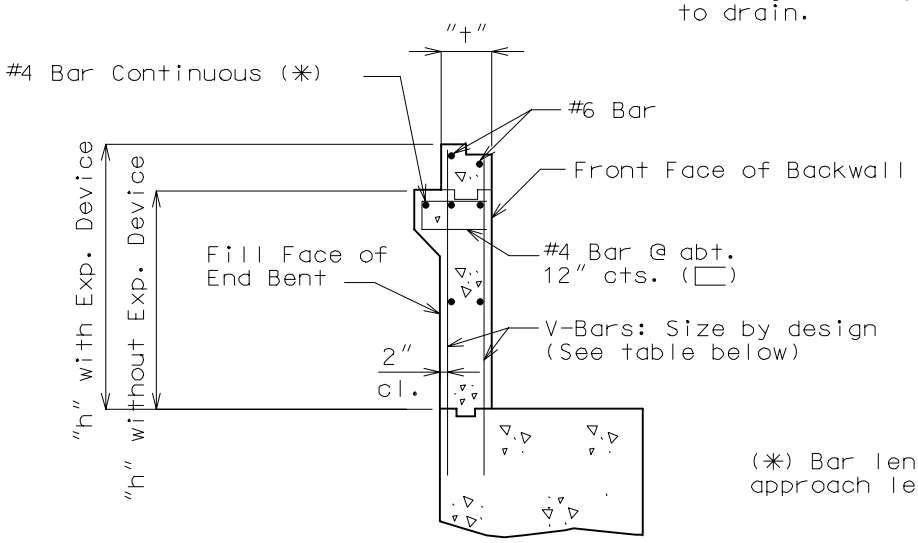


(✳) Bar length equals approach length.

PART SECTION THRU BACKWALL AND BEAM

| V-BAR SIZE AND SPACING | | | |
|---|---|---|---|
| "h" (feet) | "t" (inches) | Fill Face Reinforcement | Front Face Reinforcement |
| 1 thru 8' | 12" | #5 @ 12" | #5 @ 12" |
| 9' | 12" | #6 @ 12" | #5 @ 12" |
| 10' | 12" | #6 @ 10" | #5 @ 12" |
| 11' | 15" | #6 @ 10" | #5 @ 12" |
| 12' | 15" | #6 @ 8" | #5 @ 12" |
| 13' | 18" | #6 @ 8" | #5 @ 12" |
| 14' | 18" | #6 @ 6" | #5 @ 12" |

Note: All reinforcement is grade 60. Design is based on 45 lbs. per cu. ft. equivalent fluid pressure and 90 lbs. per sq. ft. live load surcharge.

COLUMN REINFORCEMENT

Reinforcement (Except Deck Girder)

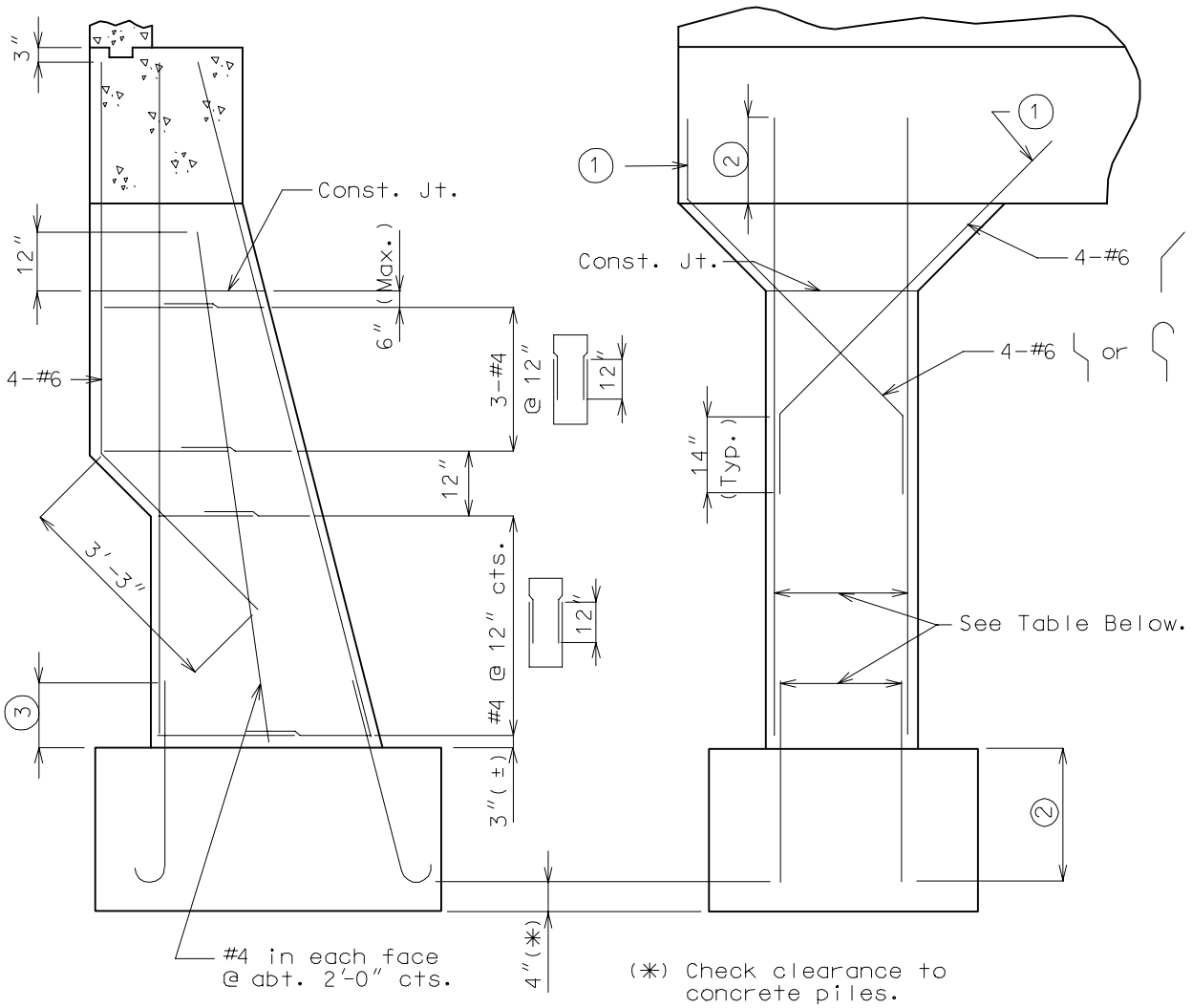


1. Extend 15" into beam, bend and/or hook if required.
2. See Development length (other than top bars) or Standard Hook minimum tension embedment "Ldh".
3. Lap splices class C - Manual Section 2.4.

## STUB BENTS:

Column reinforcement for stub bents will be determined for each case using these details as a guide.

## ADDITIONAL COLUMN REIFORCEMENT:

To be used when large corner moments is probable - consult the Structural Project Manager.

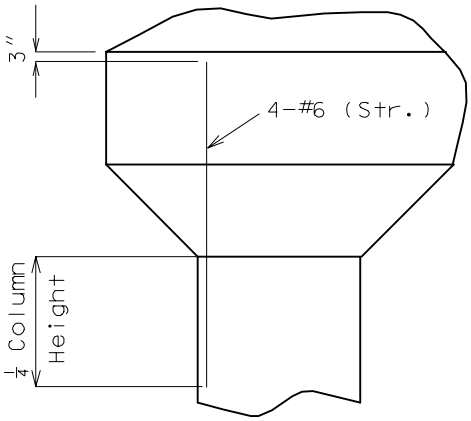


ADDITIONAL COLUMN REINFORCEMENT

| COLUMN REINFORCEMENT & FOOTING DOWELS | | |
|---|---|---|
| COLUMN HEIGHT | NO. & SIZE | |
| BOTTOM BEAM-TOP FOOTING | FILL FACE | FRONT FACE |
| Up to 15'-0" incl. | 6-#6 | 4-#6 |
| Over 15'-0" | 6-#7 | 4-#7 |

TIE BEAM

Reinforcement (Except Deck Girder)

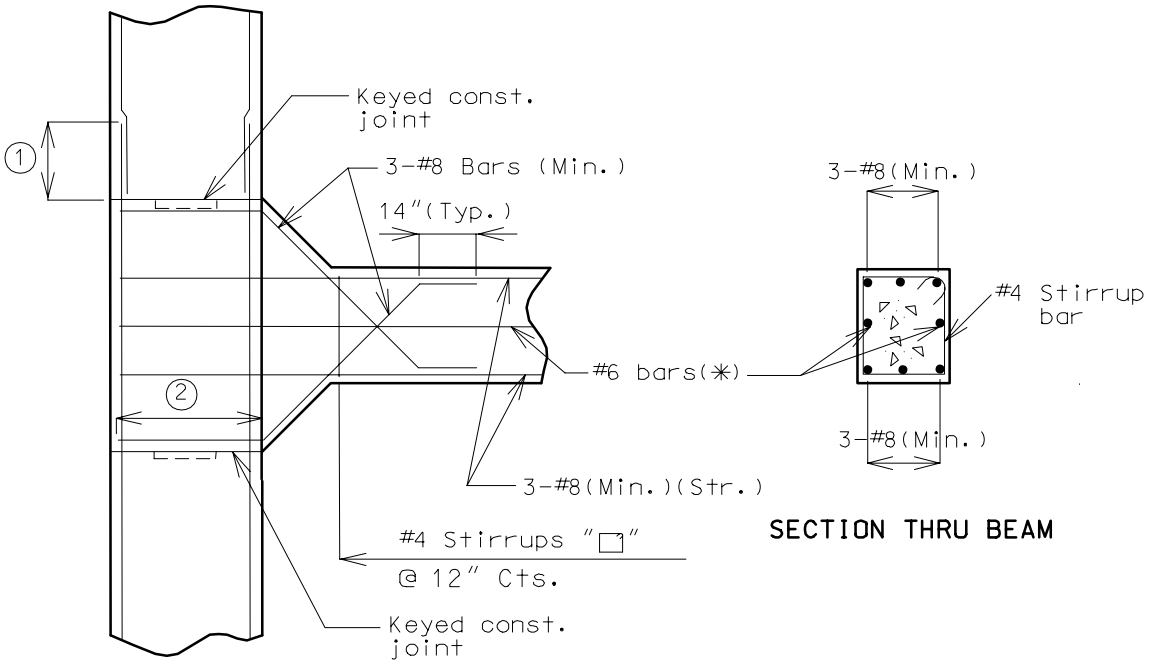


PART ELEVATION OF TIE-BEAM AND COLUMN (SPC A ONLY)

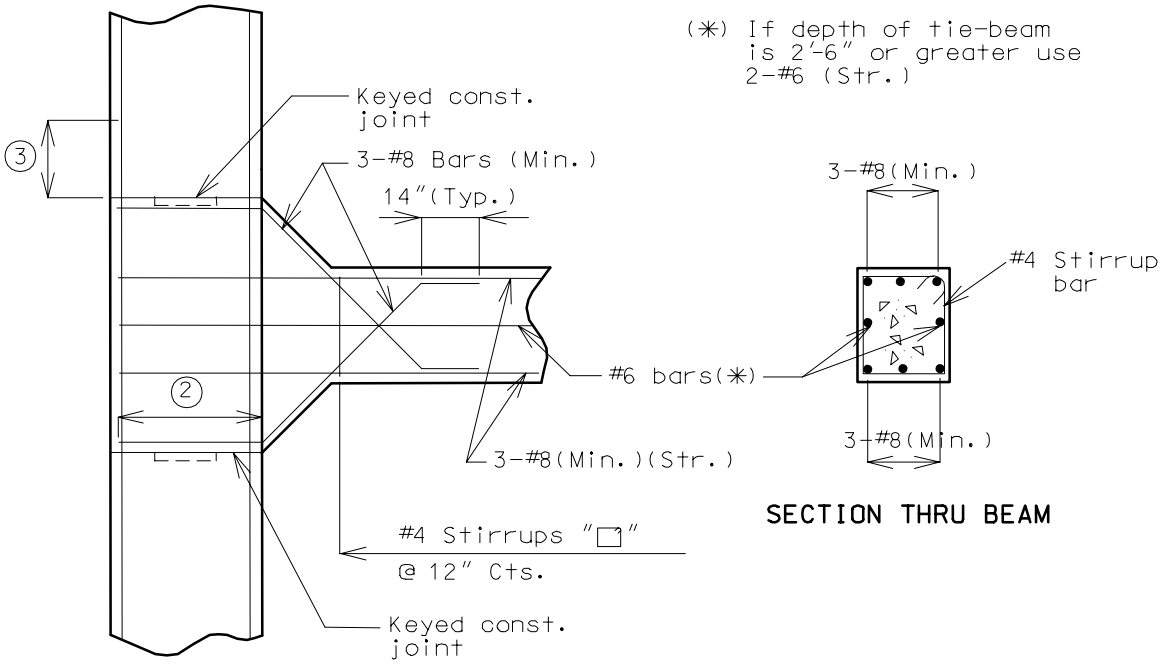


PART ELEVATION OF TIE-BEAM AND COLUMN (SPC B, C AND D)

1. Splice if column steel exceeds 30' (See lap splice in Bridge Manual Section 2.4).
2. 3-#8 bars (Min.) (Extend 2'-4" into column.)
3. 1/4 Column height (Lap splices of Column vertical reinforcement are not permitted with this length.)

## PILE FOOTINGS

**Reinforcement (Except Deck Girder)**

UNREINFORCED FOOTING - USE ONLY IN SPC A

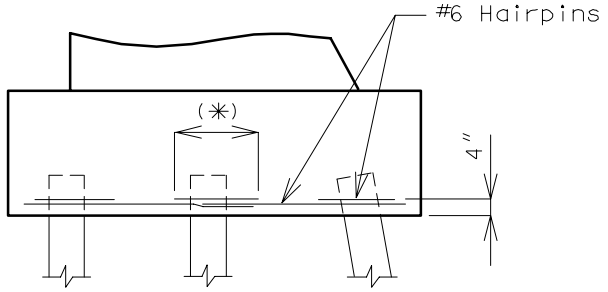


SIDE ELEVATION

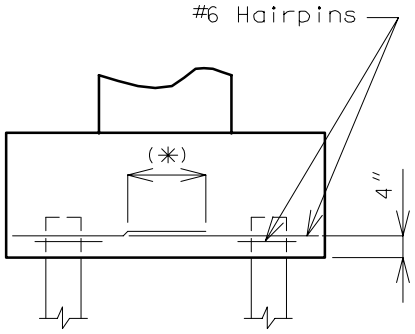


FRONT ELEVATION

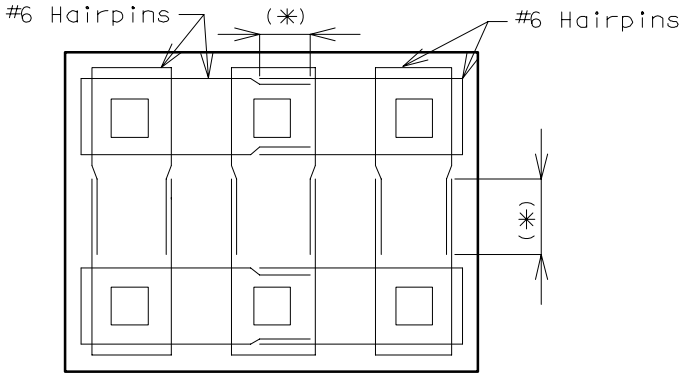


PLAN

Reinforcement not required by design, hairpins are sufficient for reinforcing.

The minimum percentage of reinforcement, p, is not required to be met, unless scour is anticipated.

REINFORCED FOOTING - USE ONLY IN SPC A(✳✳)

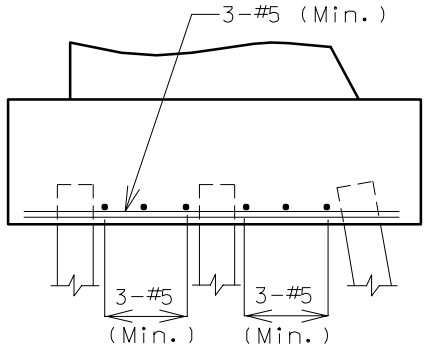


SIDE ELEVATION

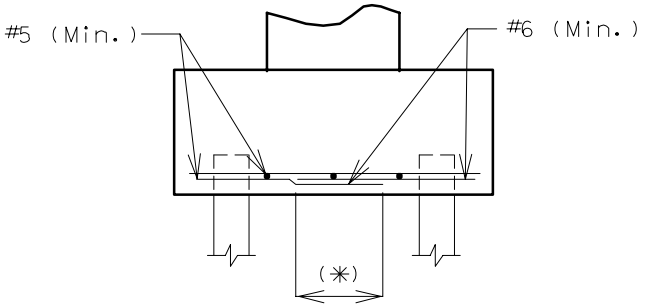


FRONT ELEVATION

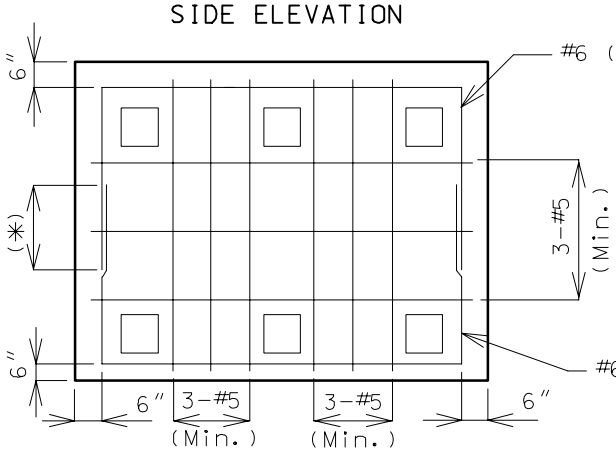


PLAN

✳ See lap splice class C (Other than top bars) - Manual Section 2.4.

✳✳ For SPC B, C and D See Section 3.71 page 5.3-3.

Note: The maximum size of stress steel allowed is #8 bars.

## SPREAD FOOTING

**Reinforcement (Except Deck Girder)**

REINFORCEMENT DETAILS - SEISMIC PERFORMANCE CATEGORY A

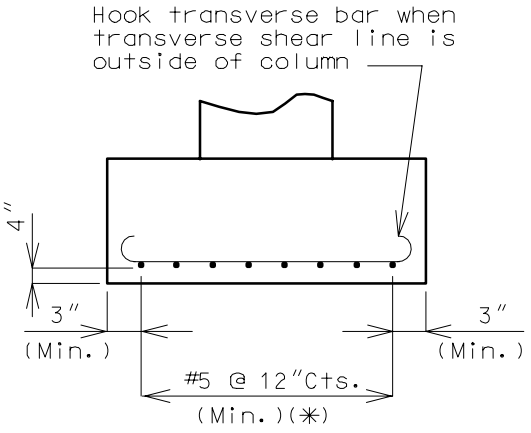


FRONT ELEVATION

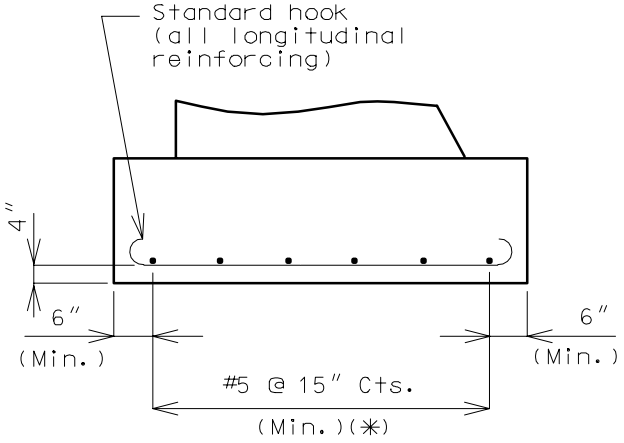


SIDE ELEVATION

(✳) #8 bars is the maximum size allowed for stress steel.

REINFROCEMENT DETAILS - SEISMIC PERFORMANCE CATEGORIES B, C & D

See Section 3.71, page 6.1-10.

**BEAM**

**Reinforcement (Conc. Deck Girder)**

For details not shown, see pages in subsection 3.70.4 (Reinforcement for other types of girders).

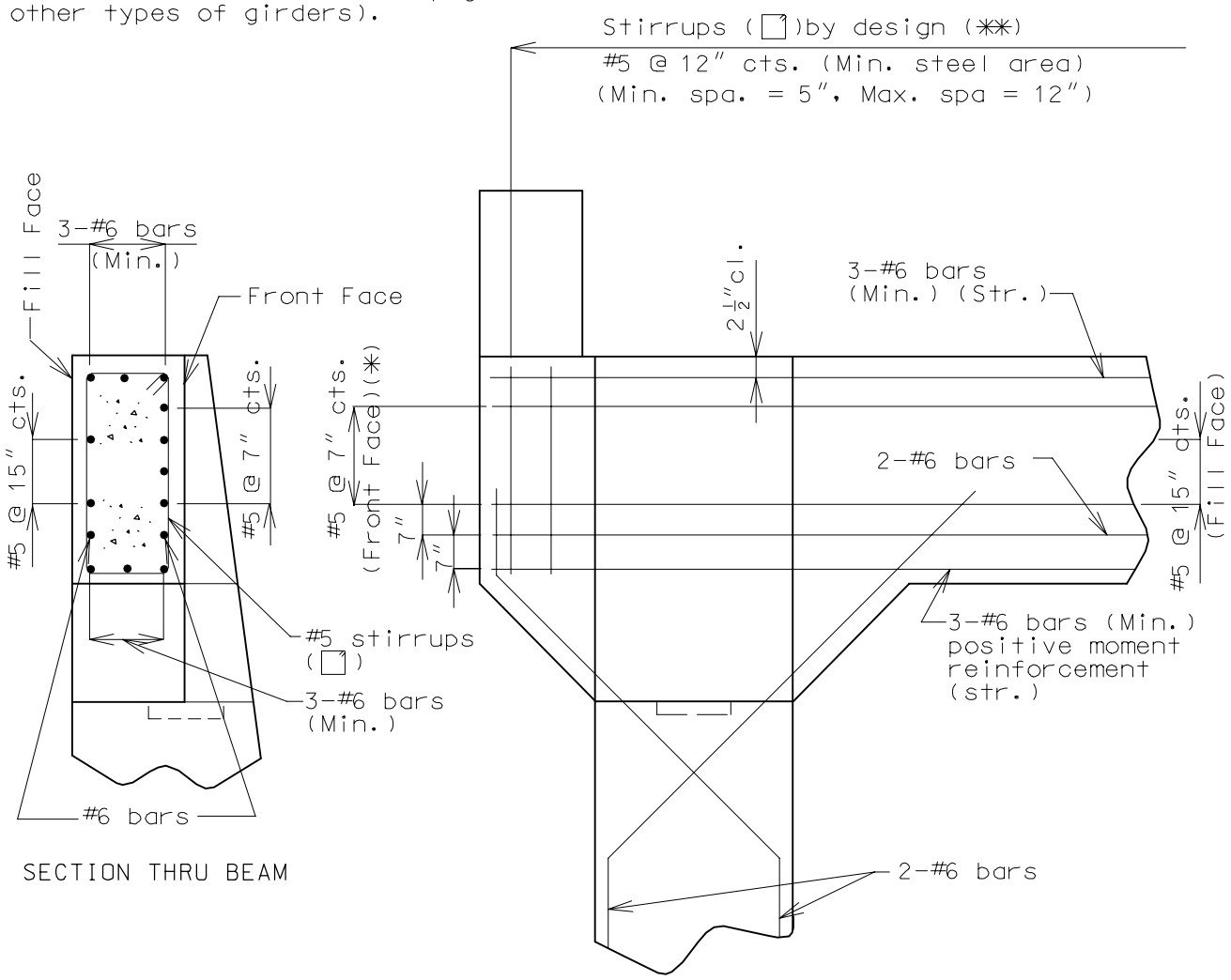


(✱) Additional reinforcing in the fill face for horizontal moments will be required for bents having 3 or more columns.

(✱✱) Use additional #4 ( 6″ ) bars under the bearings with 6″ maximum spacing of combined stirrups and hairpins.