Public Roads Div.	State Dist. No.	State Project No.	Federal Project No.	Fiscal Year	County	Sheet No.	Total Sheets
W.V.				199			

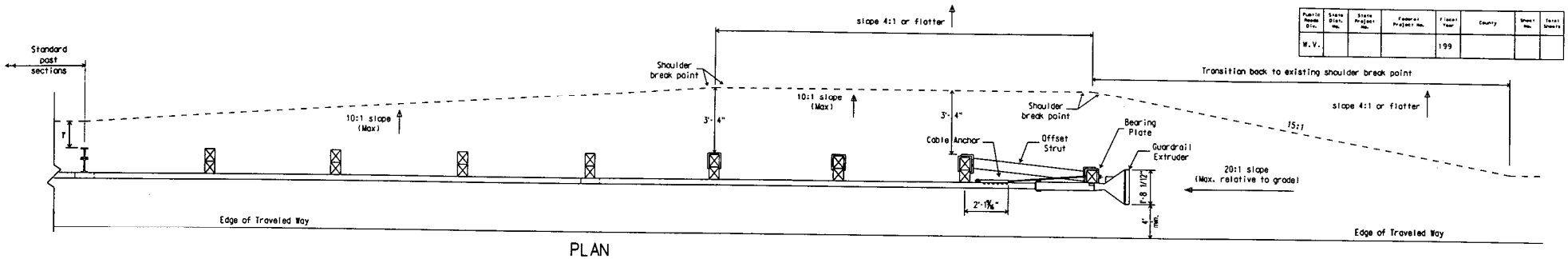

PLAN

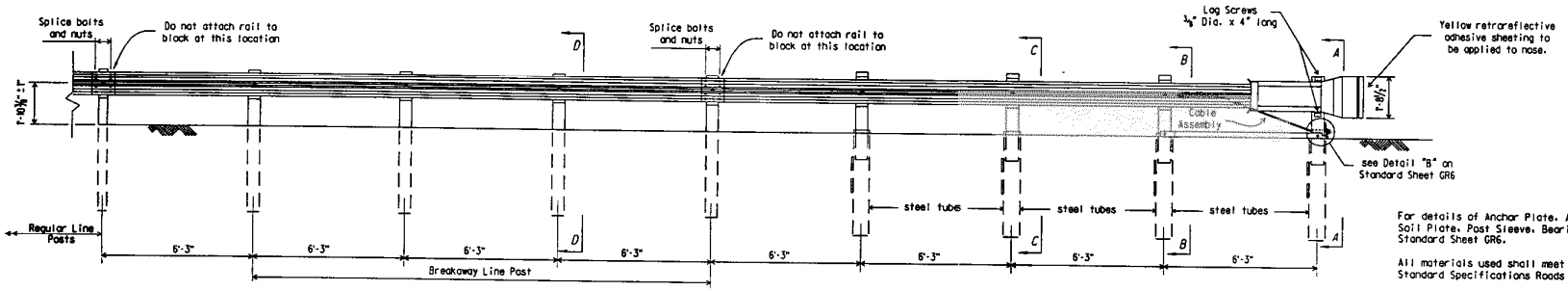

ELEVATION

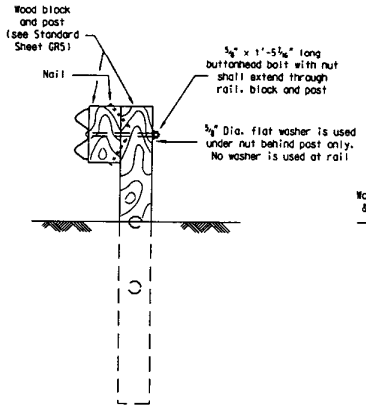

SECTION "D-D"

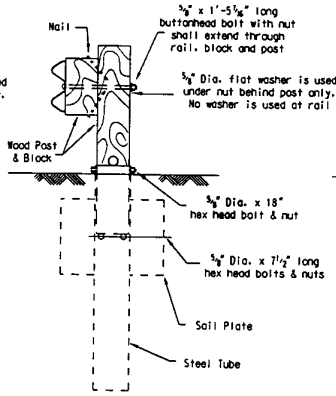

SECTION "C-C"

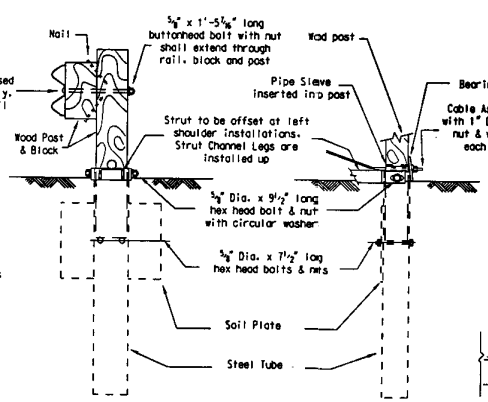

SECTION "B-B"

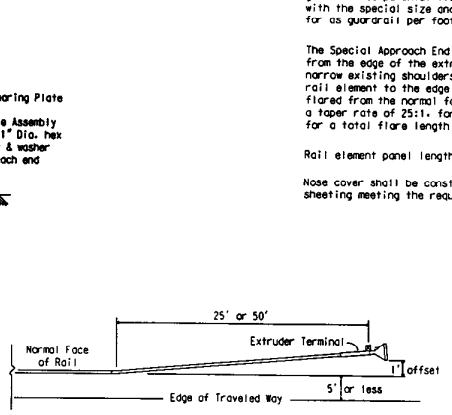

SECTION "A-A"

FLARE DETAIL

NOTES:

For details of Anchor Plate, Anchor Plate Assembly, Cable Assembly Steel Tube, Soil Plate, Post Sleeve, Bearing Plate, and other miscellaneous hardware, see Standard Sheet GR6.

All materials used shall meet the applicable requirements of Section 607 of the Standard Specifications Roads and Bridges.

The wood block shall be nailed to the post with a galvanized steel 10d common nail. The nails are to be driven into the center of the top or bottom of the block.

The cost of furnishing and installing the Special Approach End Terminal, complete with all miscellaneous hardware and parts as detailed on this Special Detail, is to be included in the unit price bid for Special Approach End Terminal. Normal guardrail components: i.e. posts, blocks, rail elements, hardware, etc.; along with the special size and/or special length wood guardrail posts, shall be paid for as guardrail per foot.

The Special Approach End Terminal installation shall maintain a 4' minimum offset from the edge of the extruder terminal to the edge of the traveled way. For narrow existing shoulders that have an offset of 5' or less from the face of the rail element to the edge of the traveled way, the rail and terminal may be flared from the normal face of rail. The flared offset distance shall be 1' at a taper rate of 25:1, for a total flare length of 25'; or a taper rate of 50:1, for a total flare length of 50' (see Flare Detail).

Rail element panel lengths shall be 25' only. Shorter lengths shall not be used.

Nose cover shall be constructed of aluminum and covered with yellow retroreflective sheeting meeting the requirements of ASTM D4956-90 Type V with No. 42 adhesive.

WEST VIRGINIA DEPARTMENT OF TRANSPORTATION
DIVISION OF HIGHWAYS
SPECIAL DETAIL

PREPARED 10-31-96

REVISION DATE

SPECIAL APPROACH END TERMINAL
OPTION "B"
(SHEET 2 OF 2)