Standard Drawing Guidance (do not show on plans):

① Update with correct sheet number.

② Modify details if expansion gap is used and add Section B-B at expansion device and additional reference notes as shown on standard drawings for panels on steel.

PCP5_PS_Box New: Jan. 2014

②

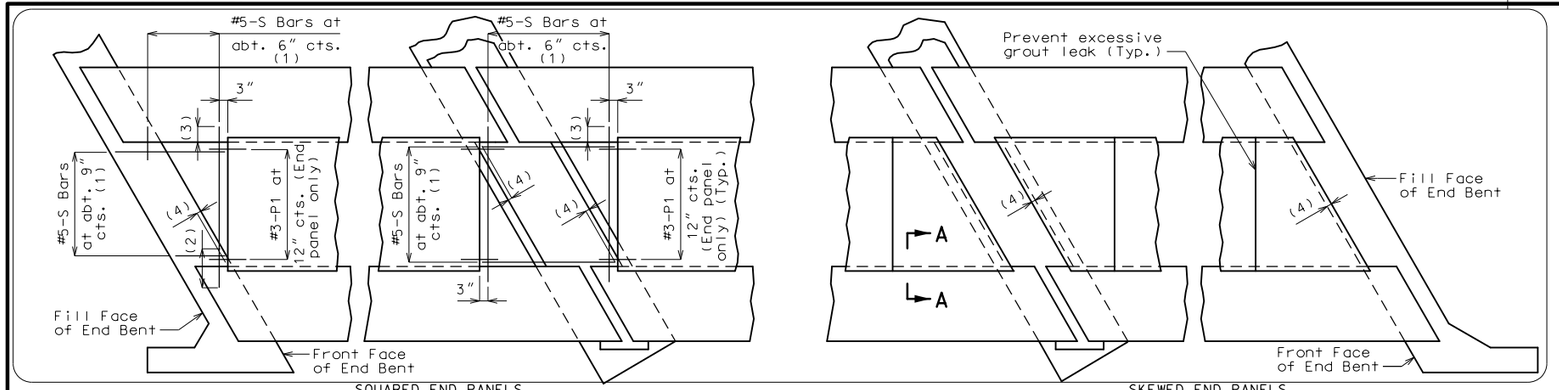

PLAN SHOWING PANEL PLACEMENT

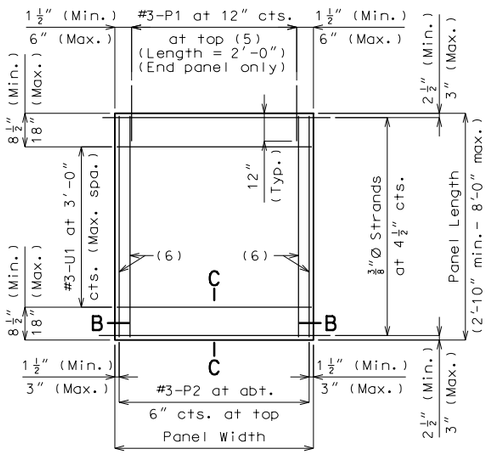

PLAN OF SQUARED PANEL

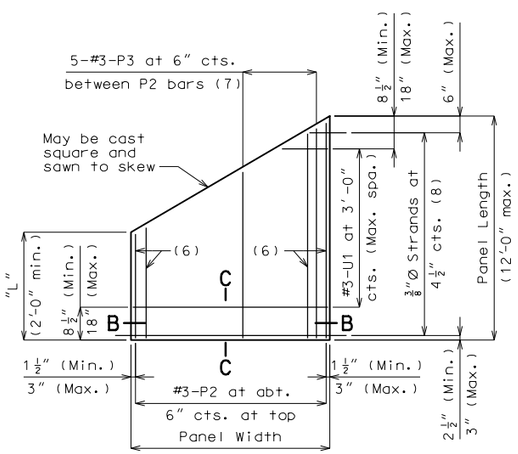

PLAN OF OPTIONAL SKEWED END PANEL

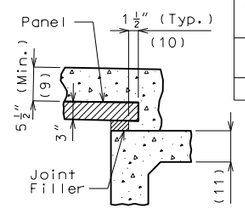

SECTION A-A

Joint Filler Dimensions		
Width	Height	
	Min.	Max.
3"	1"	4"

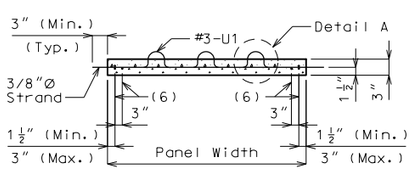

SECTION B-B

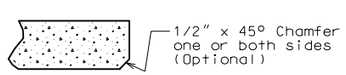

SECTION C-C

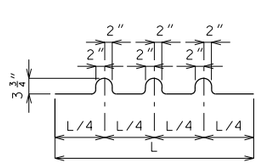

BENDING DIAGRAM FOR U1 BAR

U1 Bars may be oriented at right angles to location and spacing shown. U1 Bars shall be placed between P1 bars.

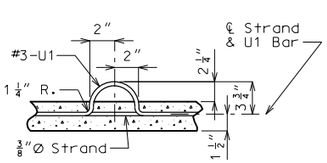

DETAIL A

Reference Notes:

Plan of Panel Placement:

(1) S-bars shown are bottom steel in slab between panels and used with squared end panels only.

(2) Extend S-bars 18 inches beyond the front face of end bents only.

(3) Extend S-bars 9 inches beyond edge of beam.

(4) End panels shall be dimensioned 1/2" min. to 1 1/2" max. from the inside face of diaphragm.

Plans of Panel:

(5) P1 bars not required for square integral end bents.

(6) #3-P2 bars near edge of panel at bottom (under strands).

(7) Use #3-P3 bars if panel is skewed 45° or greater.

(8) Any strand 2'-0" or shorter shall have a #4 reinforcing bar on each side of it, centered between strands. Strands 2'-0" or shorter may then be debonded at the fabricator's option.

Section A-A:

(9) Slab thickness over prestressed panels varies due to beam camber. In order to maintain minimum slab thickness, it may be necessary to raise the grade uniformly throughout the structure. No payment will be made for additional labor or materials required for necessary grade adjustment.

(10) Contractor shall ensure proper consolidation under and between panels.

(11) At the contractor's option, the variation in slab thickness over prestressed panels may be eliminated or reduced by increasing and varying the beam top flange thickness. Dimensions shall be shown on the shop drawings.

General Notes:

Prestressed Panels:

Concrete for prestressed panels shall be Class A-1 with f'c = 6,000 psi, f'ci = 4,000 psi.

The top surface of all panels shall receive a scored finish with a depth of scoring of 1/8" perpendicular to the prestressing strands in the panels.

Prestressing tendons shall be high-tensile strength, uncoated, seven-wire, low-relaxation strands for prestressed concrete in accordance with AASHTO M 203 Grade 270, with nominal diameter of strand = 3/8" and nominal area = 0.085 sq.in. and minimum ultimate strength = 22.95 kips (270 ksi). Larger strands may be used with the same spacing and initial tension.

Initial prestressing force = 17.2 kips/strand.

The method and sequence of releasing the strands shall be shown on the shop drawings.

Suitable anchorage devices for lifting panels may be cast in panels, provided the devices are shown on the shop drawings and approved by the engineer. Panel lengths shall be determined by the contractor and shown on the shop drawings.

When squared end panels are used at skewed bents, the skewed portion shall be cast full depth. No separate payment will be made for additional concrete and reinforcing required.

Support from diaphragm forms is required under the optional skewed end until cast-in-place concrete has reached 3,000 psi compressive strength.

Precast panels shall be brought to saturated surface-dry (SSD) condition just prior to the deck pour. There shall be no free standing water on the panels or in the area to be cast.

The prestressed panel quantities are not included in the table of estimated quantities for the slab.

Reinforcing Steel:

All dimensions are out to out.

Hooks and bends shall be in accordance with the CRSI Manual of Standard Practice for Detailing Reinforced Concrete Structures, Stirrup and Tie Dimensions.

Minimum clearance to reinforcing steel shall be 1 1/2", unless otherwise shown.

If U1 bars interfere with placement of slab steel, U1 loops may be bent over, as necessary, to clear slab steel.

Welded wire fabric or welded deformed bar mats providing a minimum area of reinforcing perpendicular to strands of 0.22 sq. in./ft., with spacing parallel to strands sufficient to ensure proper handling, may be used in lieu of the #3-P2 bars shown. Wire or bar diameter shall not be larger than 0.375 inch. The above alternative reinforcement criteria may be used in lieu of the #3-P3 bars, when required, and placed over a width not less than 2 feet.

The reinforcing steel shall be tied securely to the 3/8"Ø strands with the following maximum spacing in each direction:
#3-P2 bars at 16 inches.
Welded wire fabric or welded deformed bar mats at 2'-0".

Tie the #3-U1 bars to the #3-P2 bars, to the welded wire fabric or the welded deformed bar mats at about 3'-0" centers.

Minimum reinforcement steel length shall be 2'-0".

All reinforcement other than prestressing strands shall be epoxy coated.

Precast panels may be in contact with stirrup reinforcing in diaphragms.

S-bars are not listed in the bill of reinforcing.

Cost of S-bars will be considered completely covered by the contract unit price for the slab.

Joint Filler:

Joint filler shall be preformed fiber expansion joint material in accordance with Sec 1057 or expanded or extruded polystyrene bedding material in accordance with Sec 1073. ①

Use Slab Haunching Diagram on Sheet No. (XX) for determining thickness of joint filler within the limits noted in the table of Joint Filler Dimensions.

Thicker material may be used on one or both sides of the beam to reduce cast-in-place concrete thickness to within tolerances.

The same thickness of preformed fiber expansion joint material shall be used under any one edge of any panel except at locations where top flange thickness may be stepped. The maximum change in thickness between adjacent panels shall be 1/4 inch. The polystyrene bedding material may be cut with a transition to match haunch height above top of flange.

Joint filler shall be glued to the beam. When thickness exceeds 1 1/2 inches, the joint filler shall be glued top and bottom. The glue used shall be the type recommended by the joint filler manufacturer.

Edges of panels shall be uniformly seated on the joint filler before slab reinforcement is placed.

"THIS MEDIA SHOULD NOT BE CONSIDERED A CERTIFIED DOCUMENT."

DATE PREPARED	
7/26/2014	
ROUTE	STATE
*	MO
DISTRICT	SHEET NO.
BR	*
COUNTY	
*	
JOB NO.	
*	
CONTRACT ID.	
PROJECT NO.	
BRIDGE NO.	
PCP 5	

DATE	DESCRIPTION

MISSOURI HIGHWAYS AND TRANSPORTATION COMMISSION

105 WEST CAPITOL
JEFFERSON CITY, MO 65102
1-888-ASK-MODOT (1-888-275-6636)

IF A SEAL IS PRESENT ON THIS SHEET IT HAS BEEN ELECTRONICALLY SEALED AND DATED.

DETAILS OF PRECAST PRESTRESSED PANELS

Detailed
Checked

Note: This drawing is not to scale. Follow dimensions.

Sheet No. of

PCP5_PS_Box.dgn 9:44:24 AM 7/26/2014