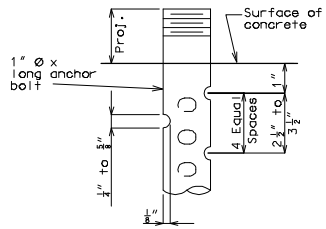


SWEDGE ANCHOR ROD DETAIL

## GENERAL NOTES:

Anchor rods for Type "C" bearings shall be 1"Ø ASTM F1554 Grade 55 swedged rods, with no heads or nuts and shall extend 10" into the concrete. Swedging shall be 1" less than the extension into the concrete. Anchor rods shall be set during the placing of concrete or grouted in the anchor rod wells prior to the erection of steel. The top of anchor rods shall be set approximately 1/4" below the top of bearing.

Anchor rods shall be coated with a minimum of two coats of inorganic zinc primer (5 mils minimum).

Weight of the anchor rods for bearings are Included in the weight of the Fabricated Structural Steel.

"∽" Indicates machine finish surface.

Shop drawings are not required for the lead plates and the preformed fabric pads.

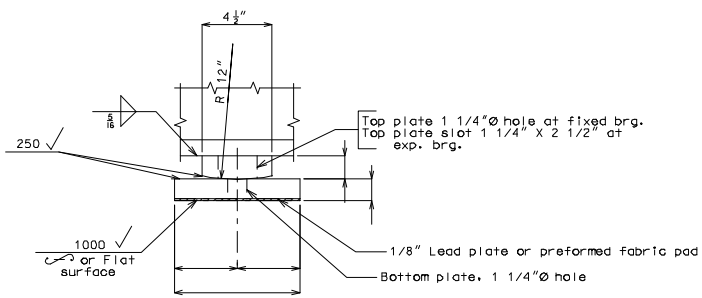


SIDE VIEW

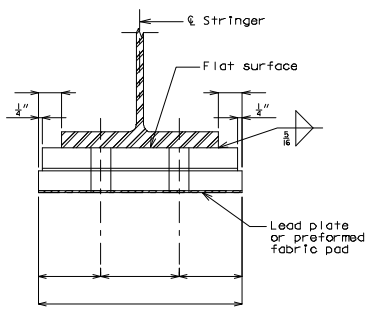


END VIEW

# TYPE "C" BEARINGS

(Estimated Weight pounds)

"THIS MEDIA SHOULD NOT BE CONSIDERED A CERTIFIED DOCUMENT."

| | |
|---|---|
| DATE PREPARED 07/28/2008 | |
| ROUTE ✳ | STATE MO |
| DISTRICT BR | SHEET NO. ✳ |
| COUNTY ✳ | |
| JOB NO. ✳ | |
| CONTRACT ID. | |
| PROJECT NO. | |
| BRIDGE NO. BRG 1 | |

DESCRIPTION

DATE

MISSOURI HIGHWAYS AND TRANSPORTION COMMISSION

105 WEST CAPITOL
JEFFERSON CITY, MO 65102
1-888-ASK-MODOT (1-888-275-6636)

IF A SEAL IS PRESENT ON THIS SHEET IT HAS BEEN ELECTRONICALLY SEALED AND DATED.

Detailed
Checked

Note: This drawing is not to scale. Follow dimensions.

Sheet No. of