Missouri Department of Transportation

Bridge Division

Bridge Design Manual

Section 3.52

Revised 09/28/2001

Click Here for Index

Index

3.52.1 Slabs

1.1 Design Assumptions
1.2 Slab Depth and Drop Panel
1.3 Slab Longitudinal Sections (2 sheets)
1.4 Slab Cross Section and Section Properties (2 sheets)
1.5 Slab Reinforcement (2 sheets)
1.6 Shear
1.7 Camber Deflection
1.8 Slab Construction Joint Details

3.52.2 End Bents

2.1 Pile Cap Bents (2 sheets)
2.2 Integral Column Bents
2.3 Reinforcement - Pile Cap Bents
2.4 Reinforcement - Wing
2.5 Design Assumptions for Integral Piles

3.52.3 Intermediate Bents

3.1 Integral Bents (4 sheets)
3.2 Transverse Beam
3.3 Column Design (2 sheets)
3.4 Integral Column Bents with Drop Panel (2 sheets)
3.5 Integral Pile Cap Bents with Drop Panel (2 sheets)
3.6 Integral Pile Cap Bents without Drop Panel
3.7 Pile Footing Design and Details (4 sheets)
3.8 Spread Footing Design and Details (3 sheets)
3.9 Pedestal Pile (3 sheets)

3.52.4 Miscellaneous

4.1 Approach Haunch

DESIGN ASSUMPTIONS

Stresses - FC = 1600 psi N = 8 (Slab, Integral Column)
FC = 1200 psi N = 10 (Open Bent, Footing)
FY = 60,000 psi reinforcing steel

Use "Variable I" analysis for all structures except solid slabs without drop panels.

Use "Constant I" analysis for solid slabs without drop panels.

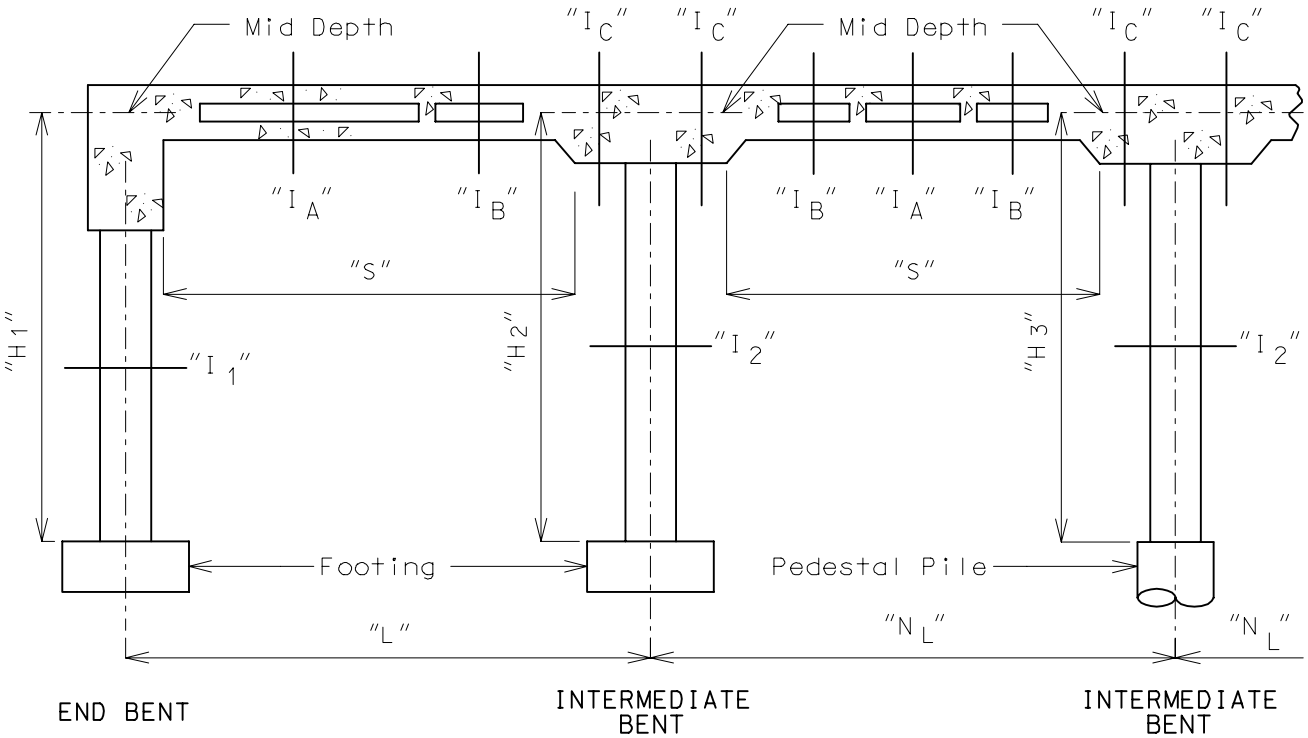

"L" = Design Span
"H" = Design Height
"I" = Gross moment of inertia of the full cross-section (Slab minus voids - integral wearing surface not included) ("I1", "IA", etc. suggested I's to be considered.)
"S" = The effective span length for the use in determining minimum slab thickness under load factor design (AASHTO 8.9).

Use the same column diameter and spacing for all Intermediate Bents.
Use the same slab thickness for all spans.

DEGREE OF RESTRAINT - LONGITUDINAL				
	Column Type	Footing Type	Top Column	Bottom Column
INT. BENTS	Integral Column	Spread or Pile	Integral	(✱✱)
	Integral Column	Pedestal Pile	Integral	(✱✱)
END BENTS	Pinned Column	any	Pinned	(✱✱)
	Integral Pile		(✱) Pinned	
	Open Bent with Column	any	Simple	
INT. BENTS	Open Bent with Pile		Simple	

(✱) See "Integral Piles" this Manual Section.
(✱✱) Use "Pinned" for Seismic Performance Category A and "Fixed" for Seismic Performance Categories B, C & D.

SLAB DEPTH AND DROP PANEL

The Slab Depth is based on the following limitations:

1. Vertical Clearance Requirements: see the Design Layout.
2. Allowable Depths:
   A. Positive Moments -
   see table of "Available Slab Depths", on page 1.4-1 of this Section.
   B. Slab Depth controlled by the minimum thickness formula -
   (Integral wearing surface is included with the total depth provided.)

   Continuous Spans - AASHTO 8.9 = (S + 10)/30

   "S" may be used as the clear distance between drop panels.
   Bridges may have two adjacent spans averaged if $S_2/S_1 < 1.5$

   Simple Spans - AASHTO 8.9 = 1.2 (S + 10)/30

   C. Negative Moments -

	DROP PANEL DEPTHS	
	MIN.	MAX.
Bents in median of dual roadway	0" or 3"	13"
Other Bents	0" or 3"	9"
INCREMENTS OF 1"		

		APPROXIMATE DROP PANEL WIDTH (FEET) (PARALLEL TO THE CENTERLINE OF ROADWAY)					
	Bents	Drop Panel Depth					
		4"	6"	7"	8"	9"	12"
3 Span Bridge	2 & 3	6'	6'	10'	8'	6'	
4 Span Bridge	2 & 4	6'	6'	10'	8'	6'	
	3	8'	10'	12'	12'	12'	12'
THESE WIDTHS ARE SUGGESTED ONLY AS TRIAL DIMENSIONS FOR DESIGN AND ARE NOT TO BE USED AS LIMITS FOR THE FINAL DESIGN.							

3. Reinforcing Steel:
   A. Positive Moments = Maximum #11 @ 5" cts.
   B. Negative Moments = Maximum #11 @ 5" cts., except #14s @ 6" cts., may be used for long spans.
4. Live Load Deflection - AASHTO 10.6

   The deflection due to service live load plus impact shall not exceed 1/800 of the span, except on bridges in urban areas used in part by pedestrains whereon the ratio preferably shall not exceed 1/1000.

SLAB LONGITUDINAL SECTIONS - HOLLOW SLABS

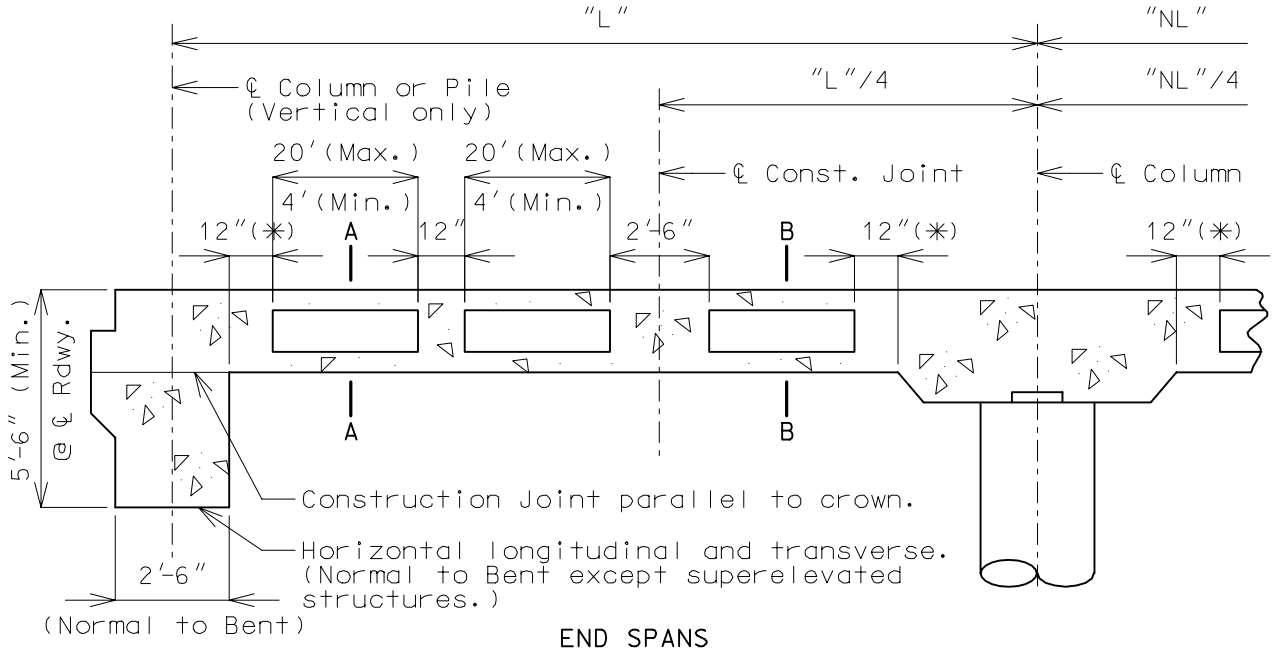

END SPANS

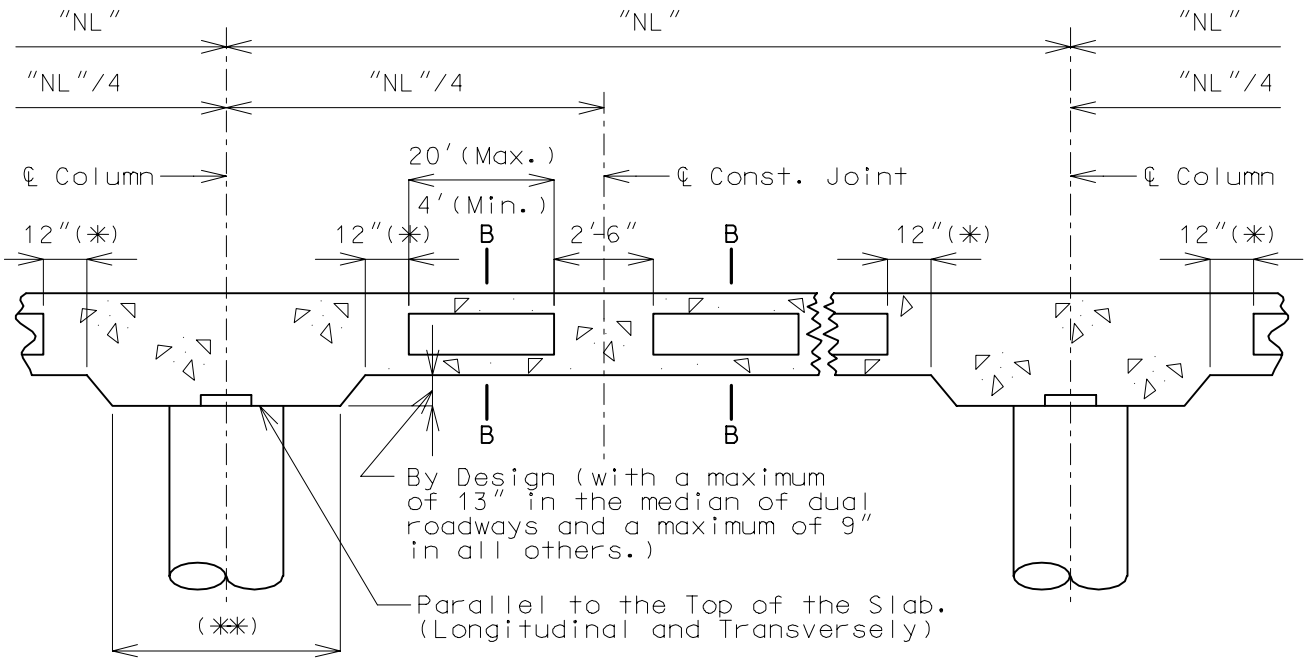

INTERMEDIATE SPANS

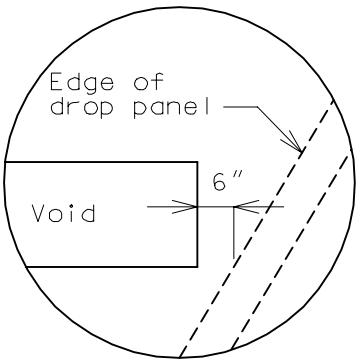

PART PLAN SKEWED DETAIL

(✳) Increase to maintain 6" minimum on skews (see detail)

(✳✳) By Design (6" increments measured normal to the centerline of bent) (The minimum is equal to the column diameter + 2'-6")

Note:
All longitudinal dimensions shown are horizontal (Bridges on grades and vertical curves, included).
For sections A-A and B-B see sheet 1.4-1 this Manual Section.

SLAB LONGITUDINAL SECTIONS - SOLID SLABS

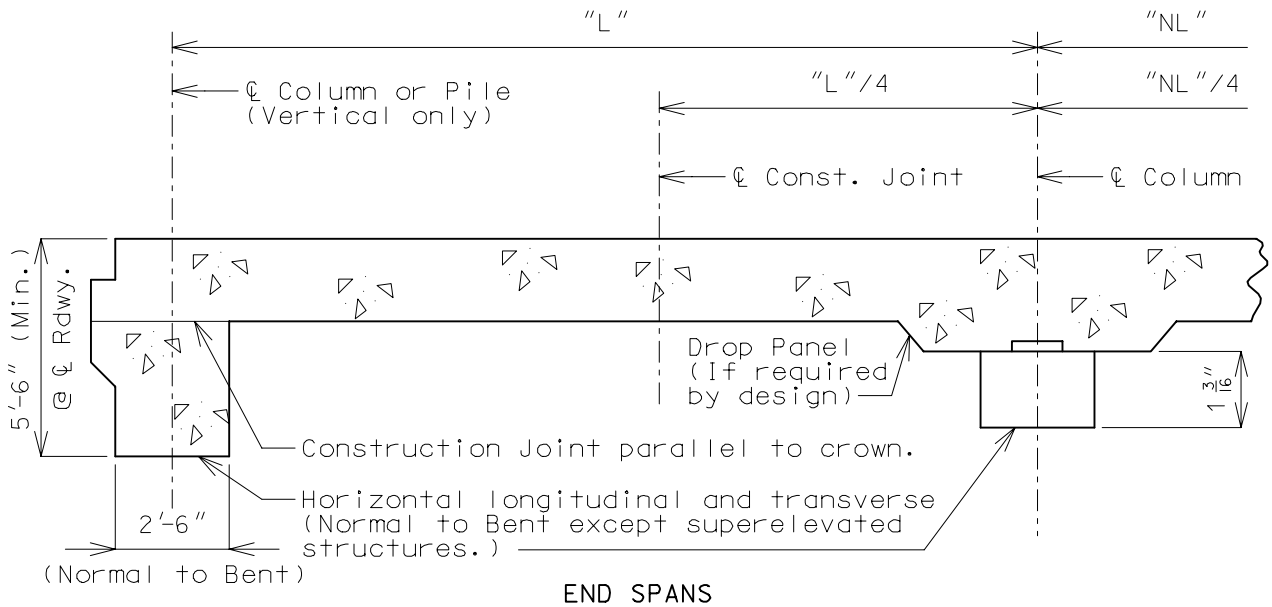

END SPANS

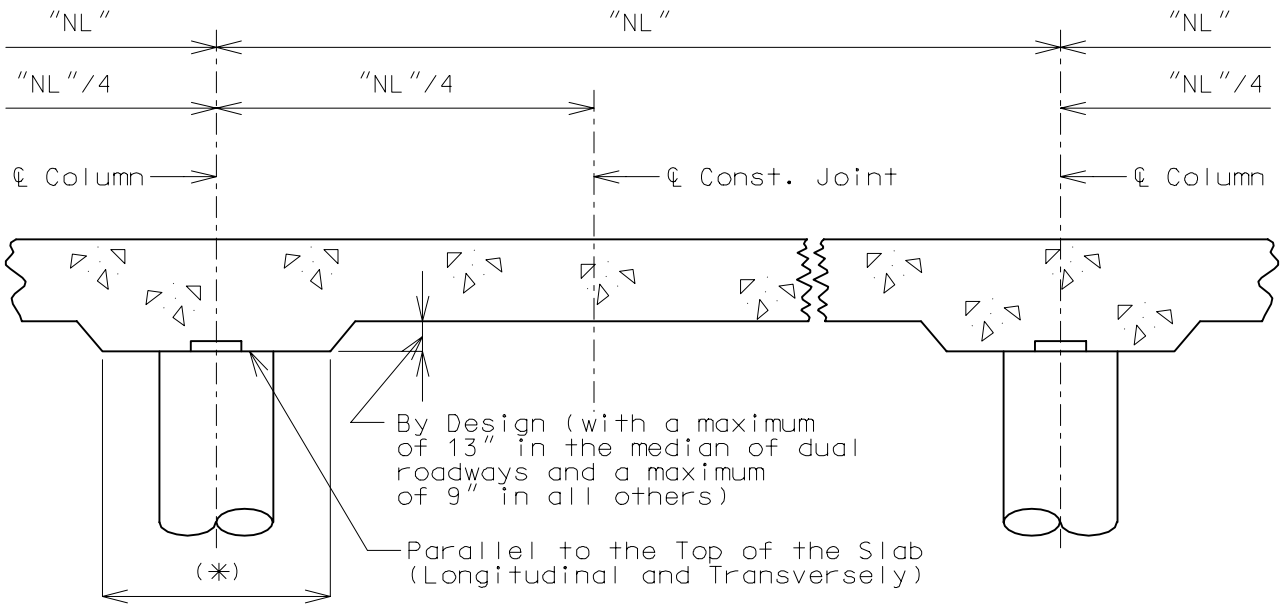

INTERMEDIATE SPANS

(✳) By Design (6" increments measured normal to the centerline of Bent)
(The minimum is equal to the column diameter + 2'-6")

Note:
All longitudinal dimensions shown are horizontal (Bridges on grades and vertical curves, included).

SLAB CROSS SECTION

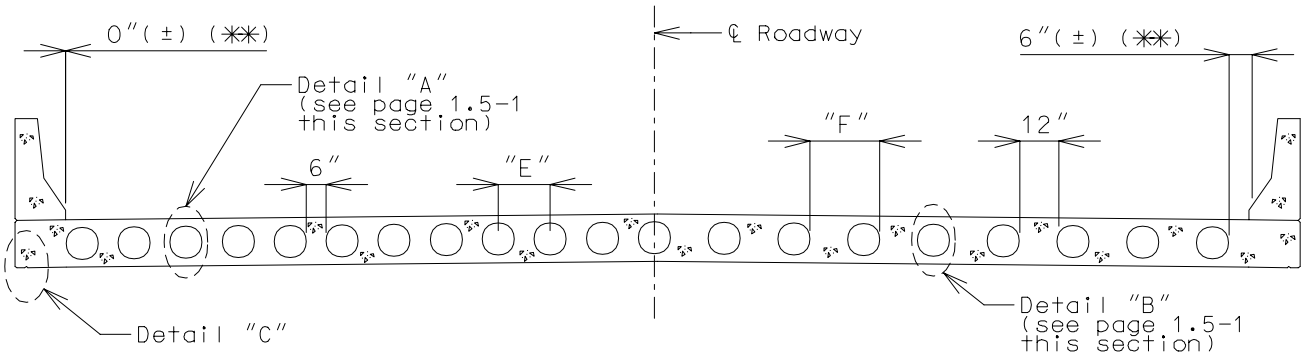

HALF SECTION A-A
CENTER OF SPAN

HALF SECTION B-B
NEAR INTERMEDIATE BENT

AVAILABLE SLAB DEPTHS AND VOID DATA			
Truck Loading			
T (✱)	"D"	"E"	"F"
17" and less - no voids			
18"	9"	15"	21"
19" (✱✱✱)	10"	16"	22"
21"	12"	18"	24"
23"	14"	20"	26"
25"	15.7"	22"	28"
26"	16.7"	23"	29"
28"	18.7"	25"	31"
30"	20.85"	27"	33"
Pedestrian Overpasses			
T (✱)	"D"	"E"	
15" and less - no voids			
16"	8"	14"	
17"	9"	15"	
18"	10"	16"	
20"	12"	18"	

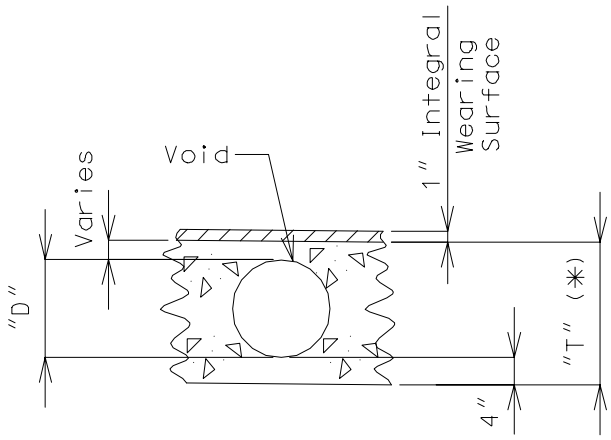

PART SECTION THRU VOID

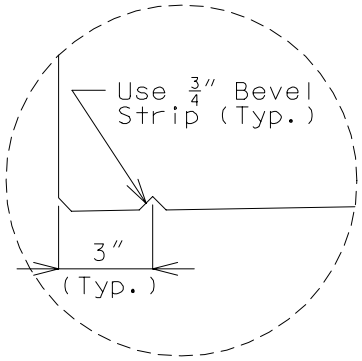

DETAIL "C"

Notes:

(✱) Increase the Dimension "T" by 1/2" for #14 bars placed in the top or bottom of the slab.
Increase the Dimension "T" by 1" for #14 bars placed in the top and bottom of the slab.
("T" and "D" are based on 3" clearance which includes the integral wearing surface to the top of the longitudinal bar.)

(✱✱) For Roadways with slab drains, use 10" minimum. For Roadways that require additional reinforcement for resisting moment of the edge beam 20" minimum, refer to page 1.5-2 of this section.

(✱✱✱) Preferred minimum (Consult the Structural Project Manager prior to the use of a thinner slab.)

SECTION PROPERTIES

Voided Slab Spans

Void Dia. (in.)	Area (sq.ft.)	Area (sq.in.)	Moment of Inertia ($ft.^4$)	Moment of Inertia ($in.^4$)	Weight (lb./ft.)
8.00	0.3490	50.2656	0.0096	201.0624	52.35
9.00	0.4417	63.6174	0.0155	322.0630	66.26
10.00	0.5454	78.5400	0.0236	490.8750	81.81
12.00	0.7854	113.0976	0.0490	1017.8784	117.81
14.00	1.0690	153.9384	0.0909	1885.7454	160.35
15.70	1.3443	193.5932	0.1438	2982.4242	201.66
16.70	1.5211	219.0402	0.1841	3818.0075	228.17
18.70	1.9072	274.6465	0.2894	6002.5789	286.09
20.85	2.3710	341.4310	0.4473	9276.7336	355.65

SLAB REINFORCEMENT

Slabs

HOLLOW SLABS

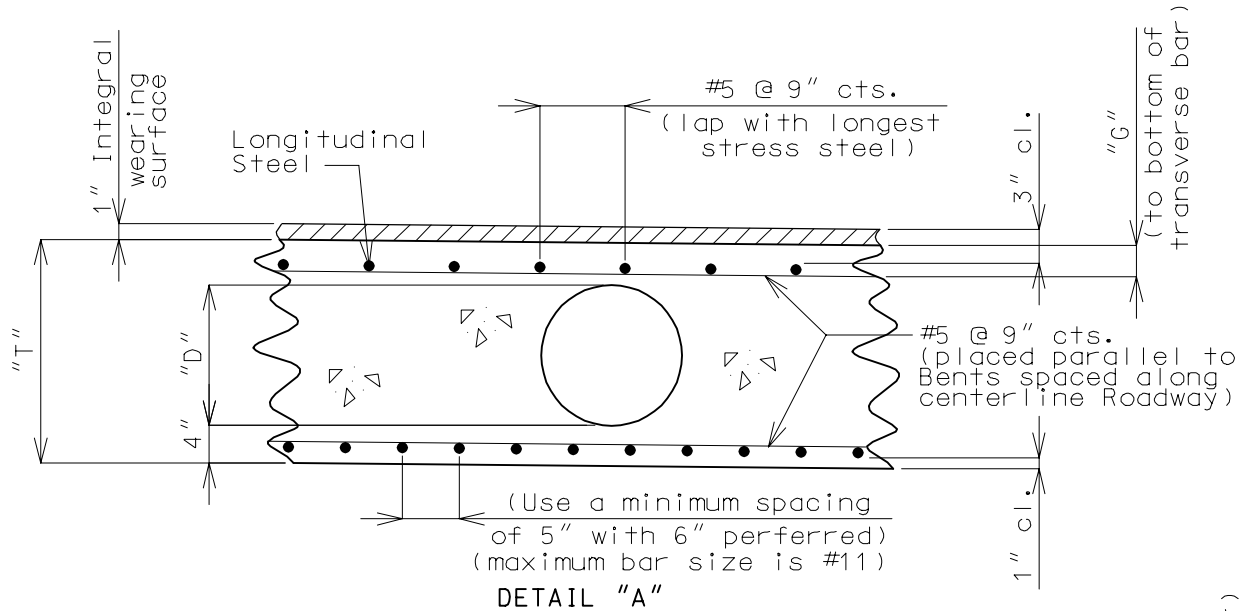

DETAIL "A"
(POSITIVE MOMENT)

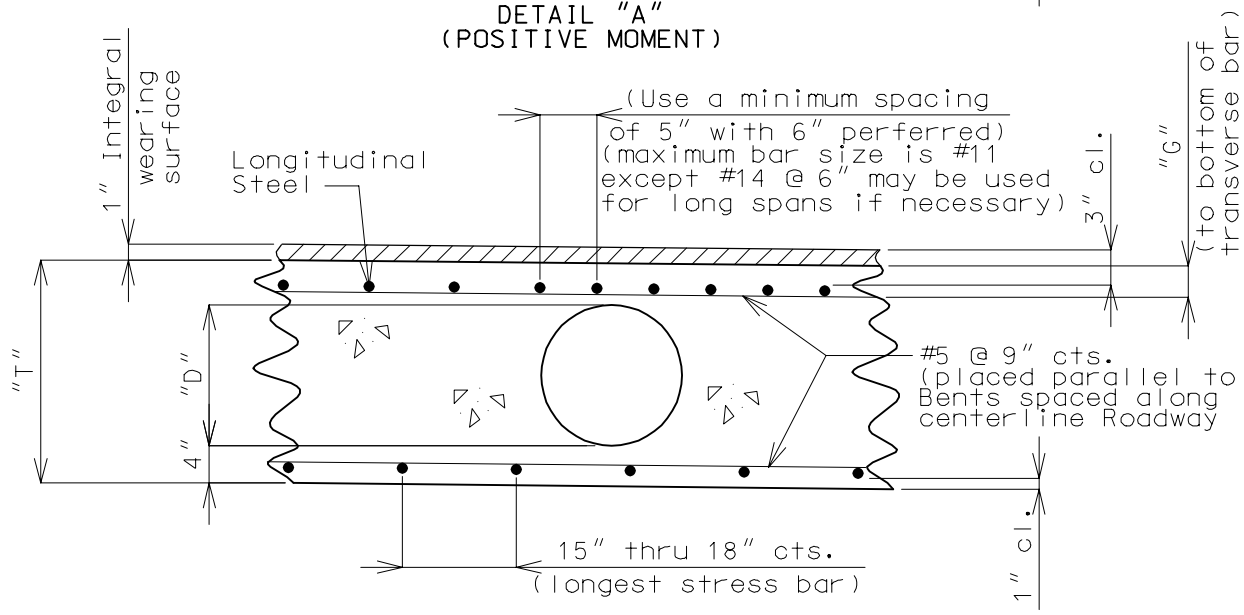

DETAIL "B"
(NEGATIVE MOMENT)

Longitudinal Reinforcement (Largest Bar)	"G"
#8	3-5/8"
#9	3-3/4"
#10	3-7/8"
#11	4"
#14	4-3/8"

Moment Curves

1. Determine reinforcing steel from the sum of the dead loads and the live loads + impact (working stress design) or design in accordance with AASHTO Article 8.16 and 8.9 (load factor design).

SLAB REINFORCEMENT

Slabs

HOLLOW SLABS (CONT.)

Moment Curves (Cont.)

2. Determine the cut-off points for the stress bars in the sets of 2 or 3. Maximum length = 60′-0″, see AASHTO Article 8.24 for extension of reinforcement.

3. Determine the drop panel width:

   Minimum width = Column diameter plus 2′-6″.
   Maximum width = (Parallel to the centerline of roadway) as determined by deign).

   In general, the width of the drop panel normal to centerline bent should be adjusted to 6″ increments.

SOLID SLABS (BOTTOM)

Use AASHTO 3.24.10 Distribution Reinforcement shall be a percentage of positive moment reinforcement (% = $100/\sqrt{S}$, with a maximum of 50%).

EDGE BEAM

Positive Moment:

The bridge curb is not to be used in determining the resisting moment of the edge beam.

Dead Load: Use the same distribution as for the slab design.
Use for simple spans 0.1 PS.

Live Load + I: AASHTO Article 3.24.8
Use for negative moment on continuous spans 0.1 PS.
Use for positive moment on continuous spans 0.08 PS.

Where P = Wheel load in pounds, see Section 1.2 of this Manual.
S = Span in feet

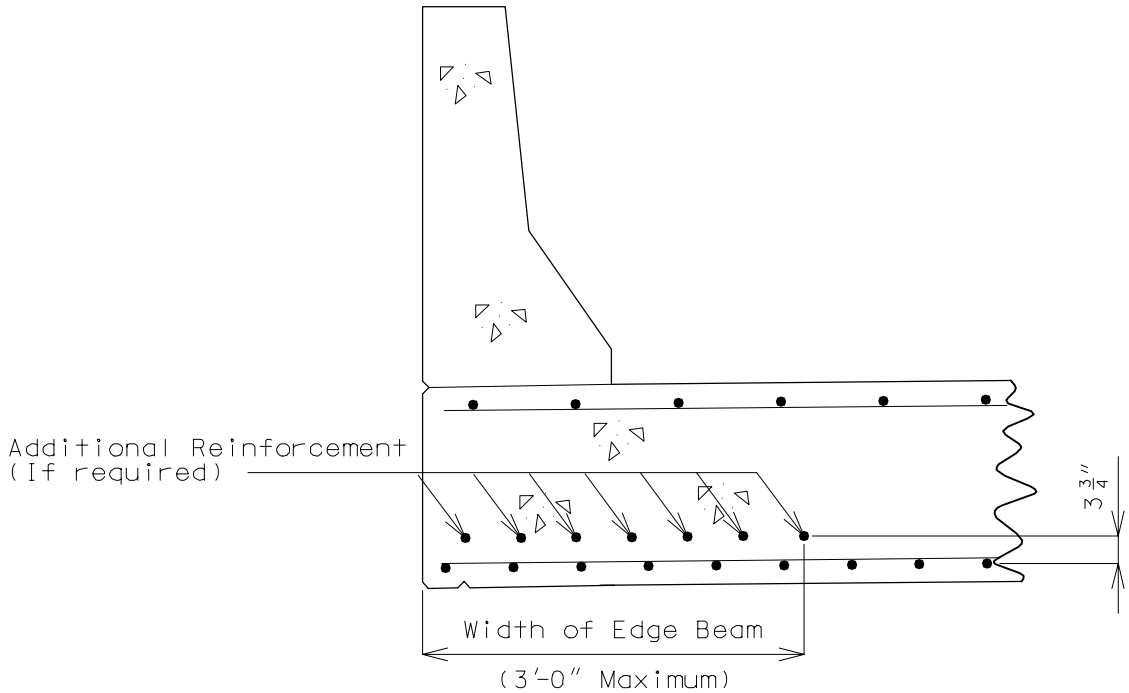

SHEAR

Shear Loads

The shear in the Hollow Slab should be computed for all loadings H20 and over.

Distribution of loads

Use the same distribution for the dead and live load as was used for the moment.

Unit Shear Stress

Load Factor:

$$\text{Shear Stress} = Vu = \frac{Vu}{\varnothing\,(Bd - \text{voids area})}$$

Working Stress:

$$\text{Shear Stress} = v = \frac{V}{Bd - \text{Area of voids}}$$

Where "d" = effective depth, Ø = 0.85 for shear

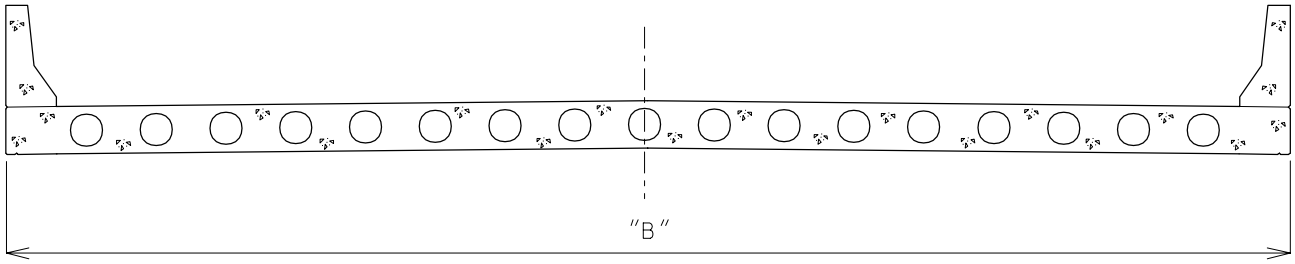

Allowable Shear Stress

Load Factor:

$Vc = 2.0\sqrt{f'c}$

Where Vc = shear strength provided by concrete

Working Stress:

$Vc = 0.95\sqrt{f'c}$

Where Vc = Allowable shear stress carried by concrete

If shear stress (load) exceeds the allowable shear use one or more of the following solutions.

1) Eliminate some voids and replace remainder.
2) Shorten alternate voids
3) Use shear reinforcing in the critical zone.

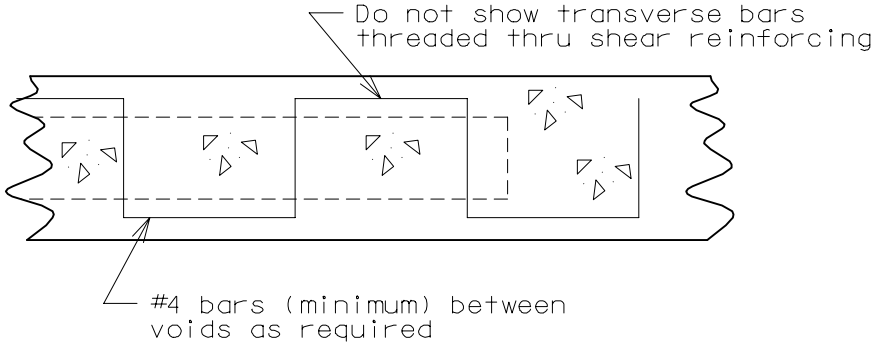

Note:
Consider a voided slab the same as a regular slab as it pertains to the minimum stirrups (AASHTO - Article 8.19).
i.e. The minimum stirrups are not required if the shear stress is less than allowable.

Ultimate Deflection:

Compute the "ultimate deflection" at 0.2 points of the spans for the dead loads without the 35# future wearing surface.

Ultimate deflection (long term) = elastic deflection x 3

Ec (Elastic Modulus) = 4×10^6 psi (districts 1 and 4)
6×10^6 psi (remainder of districts)

The modulus of elasticity for the use in the continuous structure analysis computer program (BR105) should be determined as follows:

$\Delta_{ULT} = 3 \times \Delta_{ELASTIC}$

$\Delta_{ELASTIC} = \text{Coeff.}/E_C$

$\Delta_{ULT} = (\text{Coeff.}/E_C) \times 3 = \text{Coeff.}/(E_C/3)$

Where Δ = deflection.
Δ_{ULT} = Ultimate deflection

$\Delta_{ELASTIC}$ = Elastic deflection

Example No. 1

(Assume bridge is in District 8)

$E_C = 6 \times 10^6$ psi.

$\Delta_{ULT} = \text{Coeff.} / (6/3) = \text{Coeff.}/2$

Therefore, use 2×10^6 psi for modulus of elasticity in the structure analysis computer program to get ultimate deflection. (✳)

Example No. 2

(Assume bridge is in District 1)

$E_C = 4 \times 10^6$ psi

$\Delta_{ULT} = \text{Coeff.} / (4/3) = \text{Coeff.}/1.333$

Therefore, use 1.333×10^6 psi for modulus of elasticity in the structure analysis computer program to get ultimate deflection. (✳)

(✳) Gives long term deflection as output.

SLAB CONSTRUCTION JOINT DETAILS

Slabs

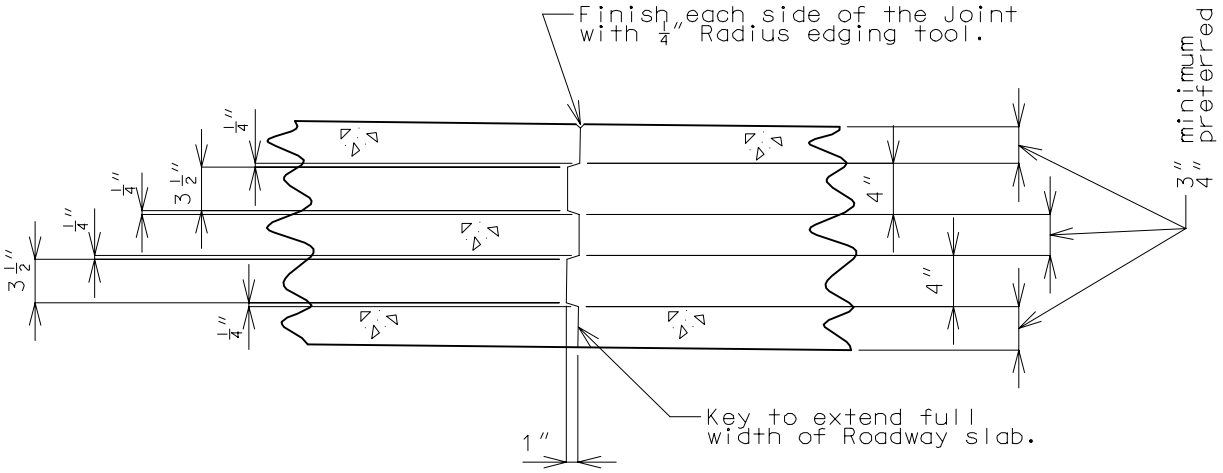

DETAILS OF SLAB CONSTRUCTION JOINT KEY
(FOR SLAB DEPTHS 17" OR MORE)

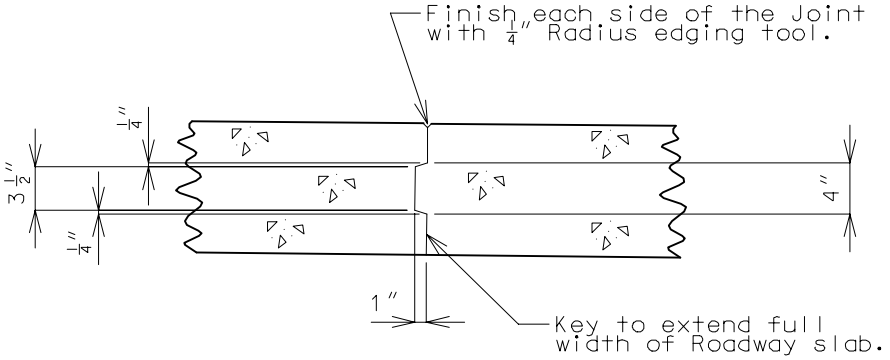

DETAILS OF SLAB CONSTRUCTION JOINT KEY
(FOR SLAB DEPTHS 16 1/2" OR LESS)

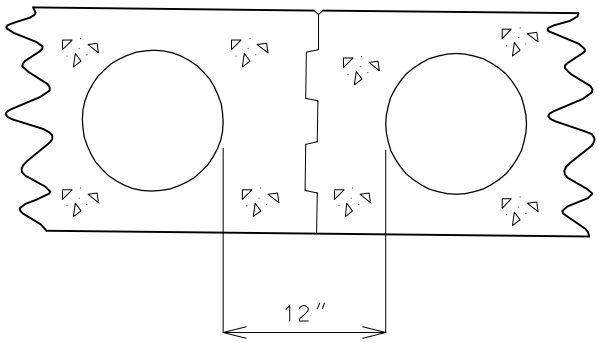

VOID SPACING AT LONGITUDINAL
CONSTRUCTION JOINT

Note: See Missouri Standard Specification (703.3.9.3) for weepholes details.

PILE CAP BENTS

End Bents

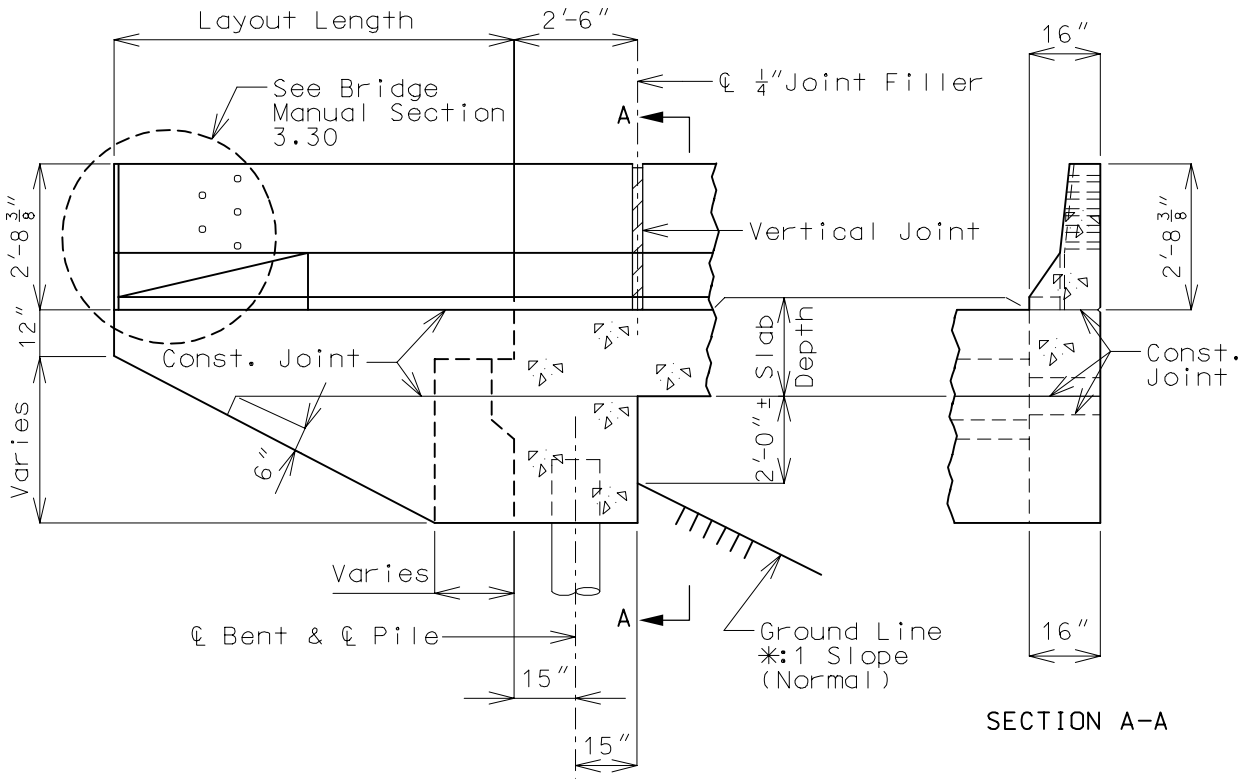

✳ See Design Layout for maximum slope of spill fill.

SECTION THRU WING

PILE CAP BENTS (CONT.)

End Bents

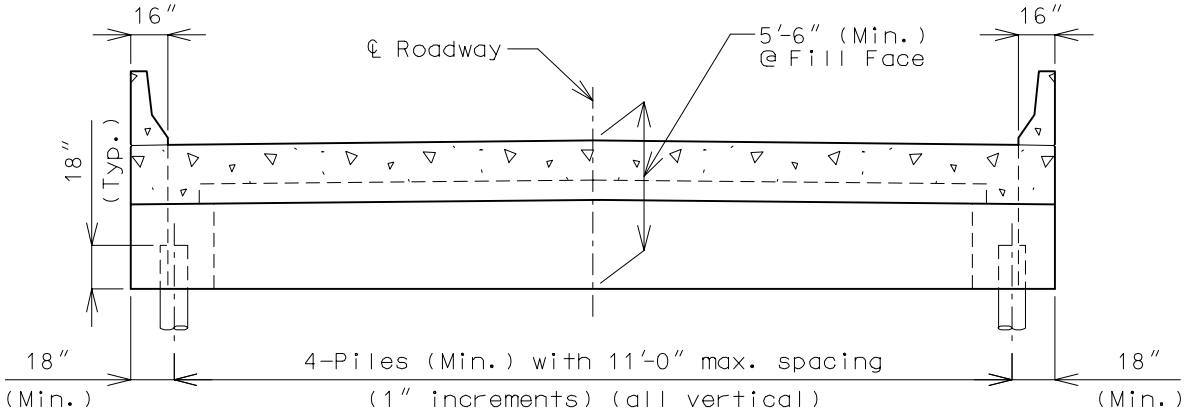

ELEVATION

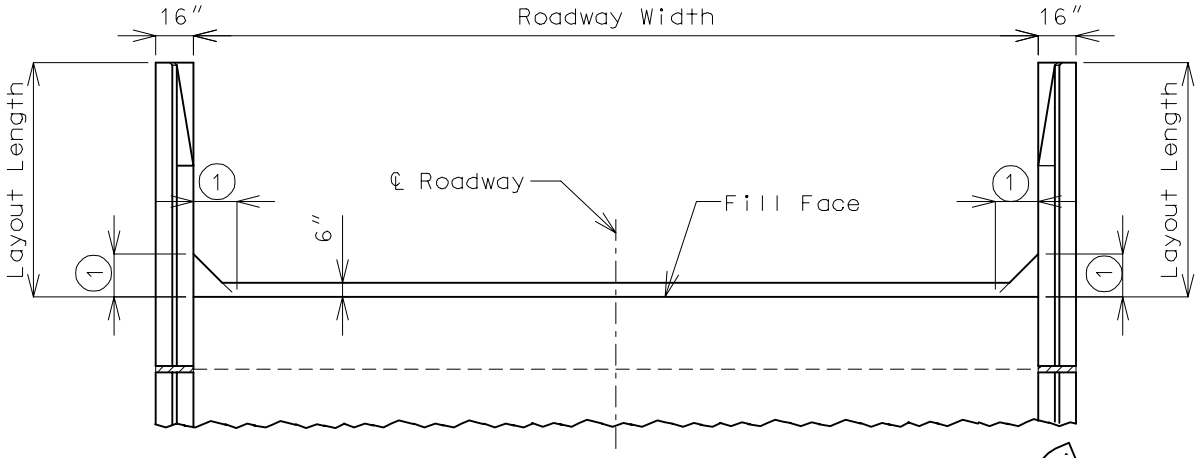

PLAN (SQUARE)

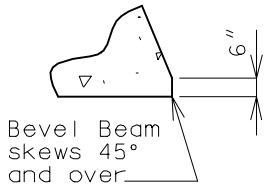

(1) Bridge Manual Section 3.77 for wing brace details.

DETAIL "B"

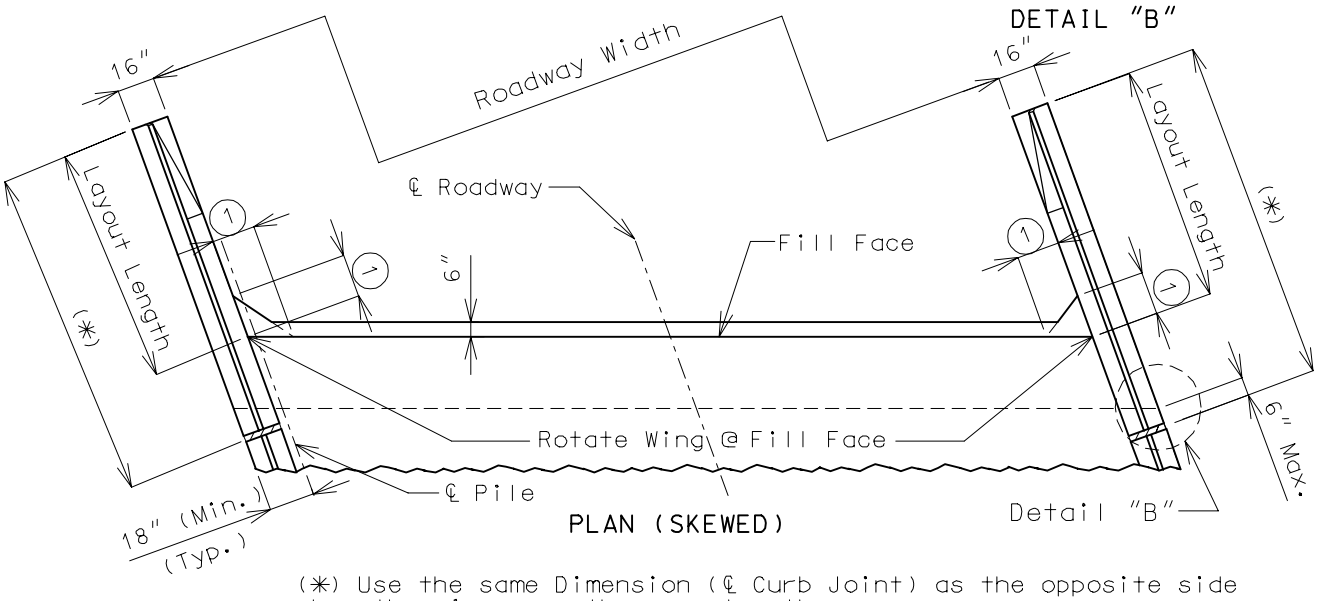

PLAN (SKEWED)

(*) Use the same Dimension (℄ Curb Joint) as the opposite side when the wings are the same length.

End Bents

INTEGRAL COLUMN BENTS
SEISMIC PERFORMANCE CATEGORY A
(PINNED COLUMN AT TOP AND BOTTOM)

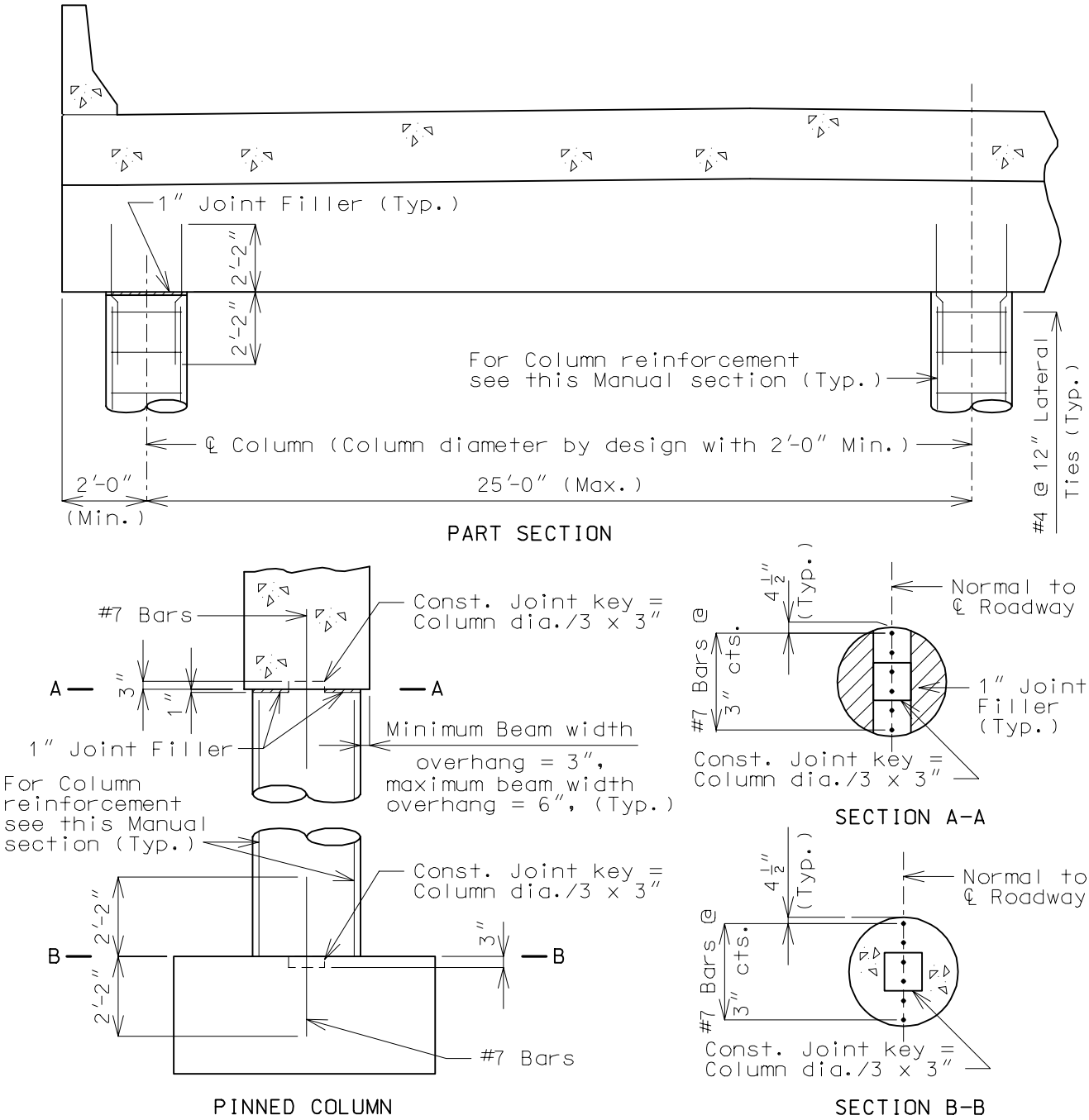

Note: If the columns at an end bent have excessive moments due to shortness of the Column or length of the span, they should be detailed as "pinned" and designed for vertical reactions only.

SEISMIC PERFORMANCE CATEGORIES B, C & D
(PINNED COLUMN AT TOP, FIXED COLUMN AT BOTTOM)

For pinned column conditions at the top, see the above details.
For fixed column conditions at the bottom and column reinforcement details, see Bridge Manual Section 3.71.

Note: For details not shown, see Bridge Manual Section 3.77 for integral pile cap details.

REINFORCEMENT - PILE CAP BENTS

End Bents

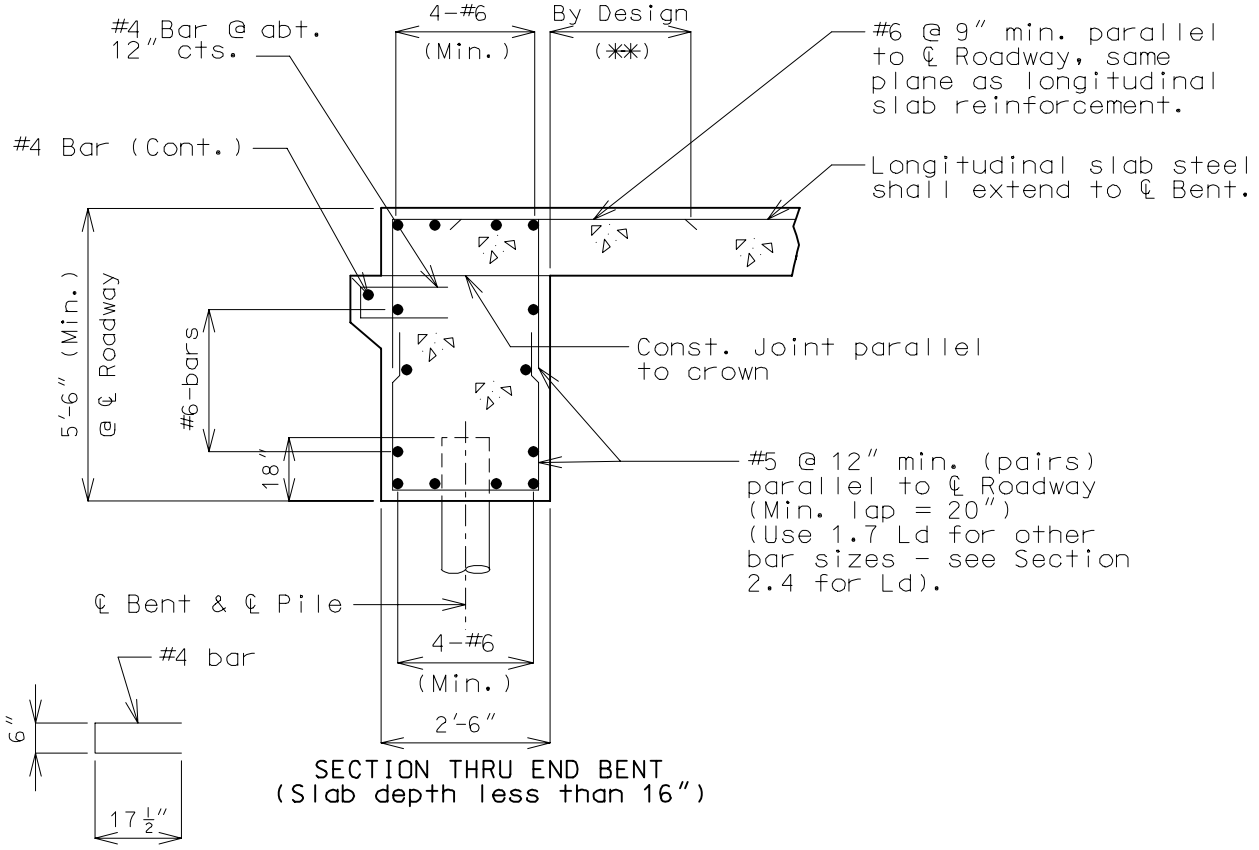

SECTION THRU END BENT
(Slab depth less than 16")

Shape 10

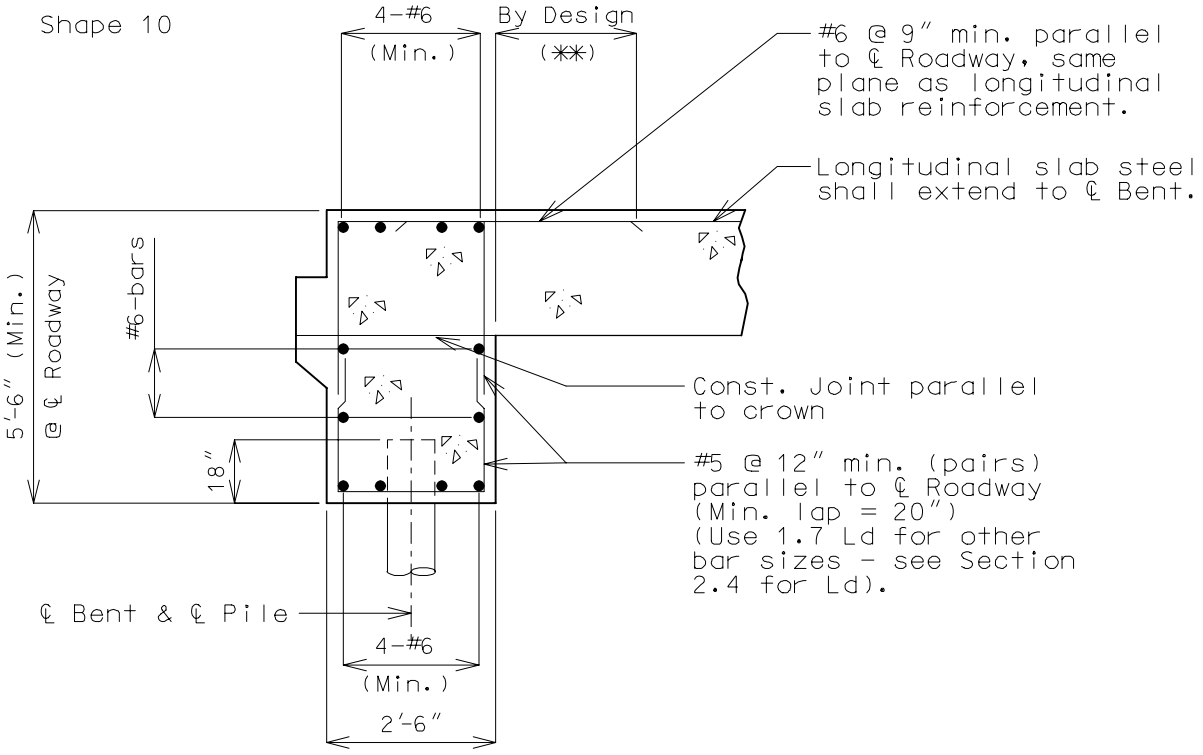

SECTION THRU END BENT
(Slab depth 16" or more)

(**) Development length for top bar minimum (see Section 2.4).

REINFORCEMENT - WING

End Bents

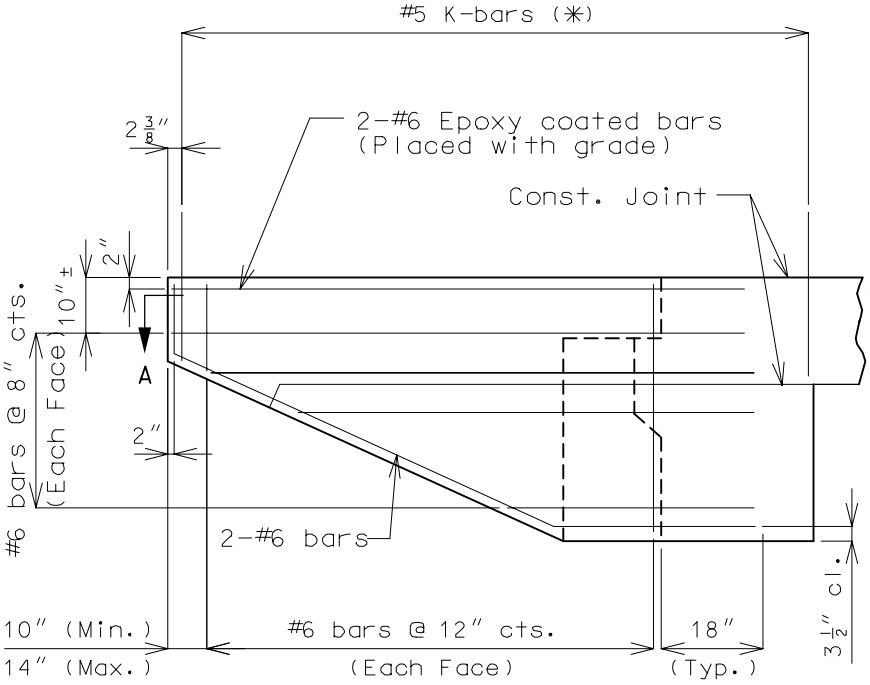

ELEVATION OF WING

(✳) Clip K bars as required to maintain minimum clearance at bottom of wing.

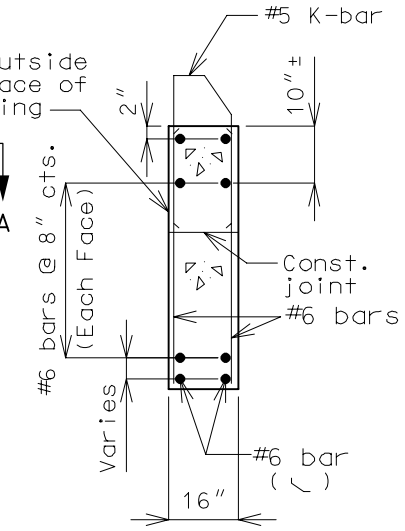

PART SECTION THRU WING

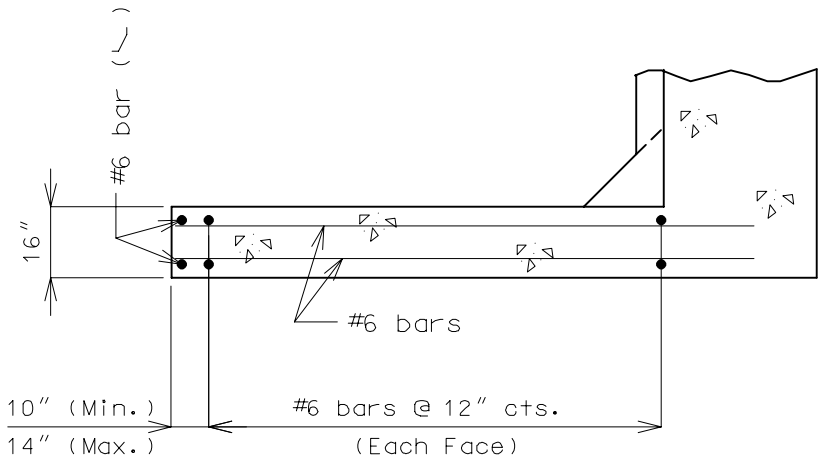

SECTION A-A

(K-bars not shown for clarity)

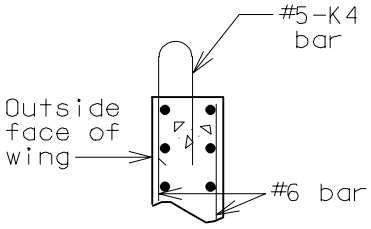

PART SECTION THRU END OF WING

Note: See Bridge Manual Section 3.30 for barrier curb details and spacing of K-bars.

DESIGN ASSUMPSIONS FOR INTEGRAL PILES

Seismic Performance Catergory A

Piles may be considered as "pinned" (for superstructure) at the pile cap and designed for vertical loads only unless they fall under the following general conditions in which case they should be checked for the loadings as specified for columns.

1. Height from centerline of slab to "pin" is less than 15'.

   The location of the pinned joint is arbitrarily taken as about 1/3 of the length of long piles or at a point about 10' below the natural ground line.

2. Piles having a large gross moment of inertia (cast-in-place concrete) gross I of steel BP = I x n.

3. The number of piles used on a fairly long structure is small.

Seismic Performance Catergories B, C & D

Piles shall be checked for combined axial and bending stresses for seismic loading conditions. For AASHTO group loads I thru VI as applicable, follow criteria noted above for seismic performance category A.

INTEGRAL BENTS

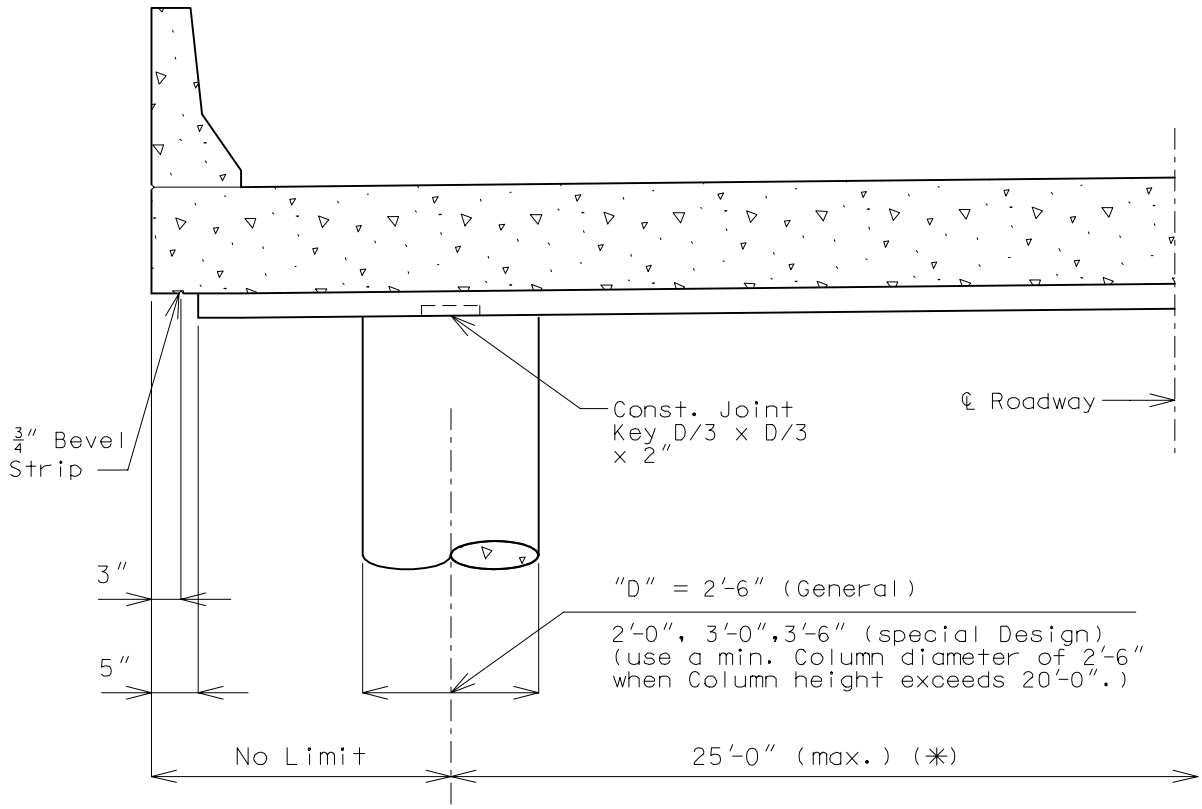

HALF SECTION

(✳) 25'-0" is the max. column spacing allowed. However, the footing pressure may be the controlling factor for the column spacing. It is suggested that a rough check be made of the footing pressure before the spacing is definitely established.

In congested areas, when it is desired to keep the number of columns to a min., larger column spacings may be desirable. (consult the Structural Project Manager).

In general, use two 2'-6" columns for Roadways thru 44'-0" and additional 2'-6" columns for wider Roadways.

Intermediate Bents

INTEGRAL BENTS
SEISMIC PERFORMANCE CATEGORY A

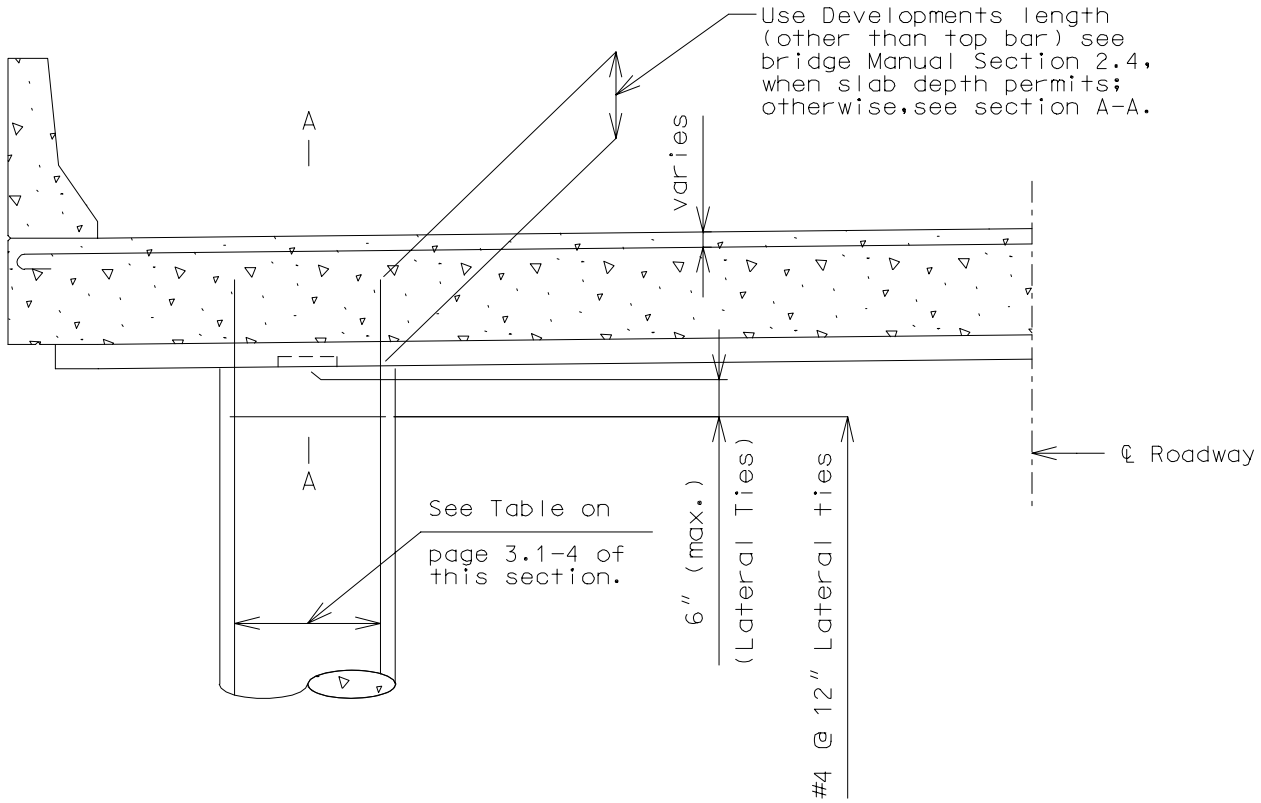

HALF SECTION

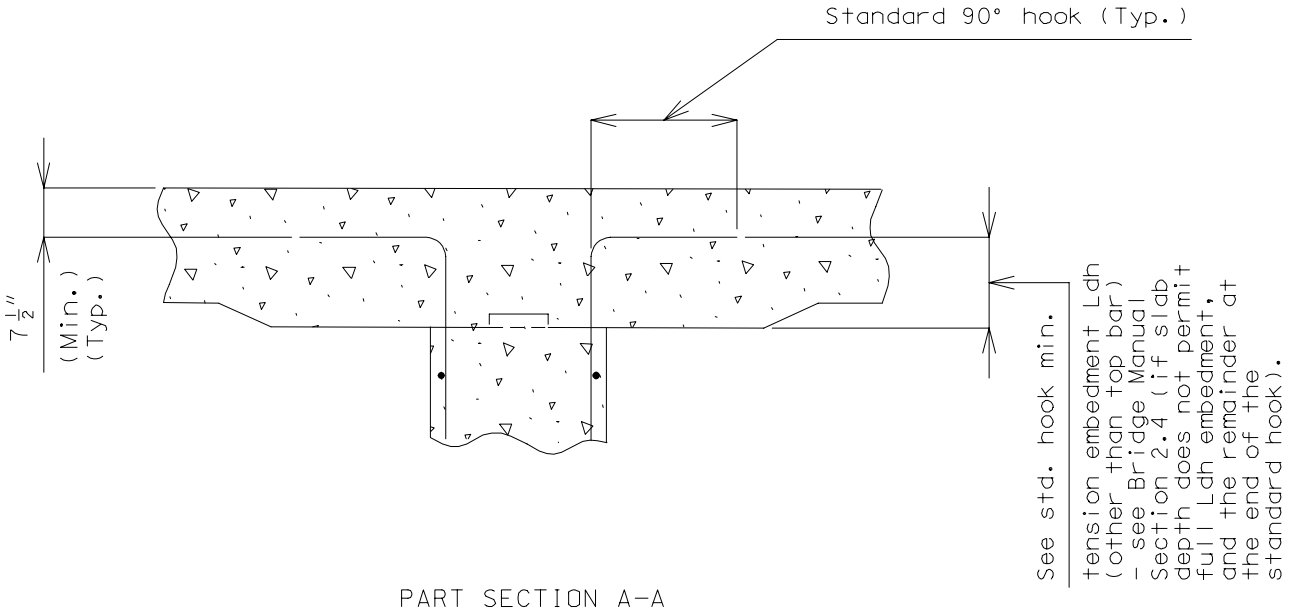

PART SECTION A-A

Note: For details not shown for columns and footings, see Bridge Manual Section 3.71.

INTEGRAL BENTS (CONT.)

SEISMIC PERFORMANCE CATEGORIES B, C, & D

SEE BRIDGE MANUAL SECTION 6.1, SUBSECTION 3.1.7 FOR SEISMIC DESIGN OF BEAM-COLUMN JOINT.

INTEGRAL BENTS
COLUMN REINFORCEMENT

Use minimum of 1% of gross area of column. (AASHTO Article 8.18)

Column Diameter	Minimum Reinforcement
2'-0"	8-#7 bars
2'-6"	9-#8 bars
3'-0"	13-#8 bars
3'-6"	18-#8 bars
4'-0"	23-#8 bars

Note: Use minimum size reinforcing bars to save on development length.

TRANSVERSE BEAM (✳) Intermediate Bents

1. In order to use the STRESS computer program for the Transverse Beam design, the columns must be considered fixed at the top of the footing. An Intermediate Bent is unstable if the bottom of columns is pinned in the STRESS program. Note: In Seismic Performance Category A, the actual details at the bottom of column will be pinned but considered fixed when using the STRESS program for the design of the Transverse Beam.

2. Effective section width = Drop panel width or column + 2'-6"
   Effective section depth = Slab + drop panel depth.

3. Column spacing (to the nearest 1") should be that which produces a balanced beam reinforcement design (approximately equal total (DL + LL + I) positive and negative beam moments). A positive beam moment up to 10% larger than the negative moment is acceptable.

4. Dead Load is uniformly distributed over full width.

5. Live Load + Impact (30%) - apply wheel line reactions as concentrated loads.

6. Reinforcement determined from using maximum moments (Load Factor Design).

7. Check Shear - AASHTO 8.16.6.

8. For negative moment reinforcement in the beam, the moment shall be determined at the centerline of column. This deviates from the usual practice for Rigid Frame design and is based on the fact that the beam width is generally at least 2 feet larger than the Column diameter.

(✳) For integral intermediate bent details, see subsections 3.4 thru 3.6 of this section.

COLUMN DESIGN-TOP COLUMN

Intermediate Bents

1) For the Dead Load and the Live Load plus Impact - use loading conditions to produce maximum moments or reactions as required.

2) The volume change (temperature change and shrinkage).
   Coefficients (AASHTO - Article 8.5)
   - Thermal 0.000006 ft./ft./°F
   - Shrinkage 0.0002 ft./ft.

   Temperature Range (AASHTO - Article 3.16)
   - Rise 30° F.
   - Fall 40° F.
   - $E_c = 4 \times 10^6$ (All Districts)

Units
FEM = ft.-kips
E_c = psi
I = $ft.^4$
H = ft.
Δ = ft.

Seismic Performance Category A
(Bottom of Column pinned)

$$\left[\begin{array}{l}(*)\text{ moment @}\\ \text{Top of Column}\end{array}\right] \text{FEM} = \frac{3\ Ec\ I\ \Delta \times 12^2}{H^2 \times 1000}$$

Seismic Performance Categories B, C, D
(Bottom of Column fixed)

$$\left[\begin{array}{l}(*)\text{ moment @}\\ \text{Top \& Bottom}\\ \text{of Column}\end{array}\right] \text{FEM} = \frac{6\ Ec\ I\ \Delta \times 12^2}{H^2 \times 1000}$$

Note: Adjust moments of inertia for skewed structures. See Bridge Design Manual Section 1.2 for procedure.

(*) STRESS program may be used in lieu of these formulas. see example VII in STRESS manual.

Example No. 1 (Seismic Performance Category A)
(temperature drop and shrinkage)

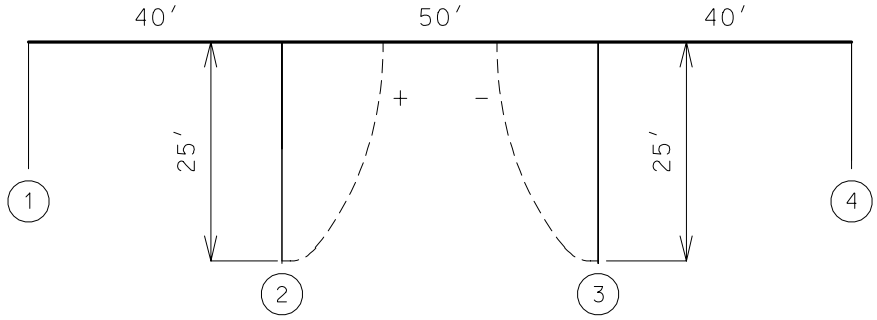

I (2 Columns, Column Diameter = 2.5′) = 3.835 ft^4
Thermal: Δ = 0.000006 x 40° x 50′/2 = 0.006′
Shrinkage: Δ = 0.0002 x 50′/2 = 0.005′
Total Δ = 0.006′ + 0.005′ = 0.011′
Moment FEM = $3 \times 4 \times 10^6 \times 3.835 \times 12^2 \times 0.011/(25^2 \times 1000)$ = 116.7 ft.-kips
(plus @ Bent #2 and a minus @ Bent #3)

Example No. 2 (Seismic Performance Category A)
(temperature rise)

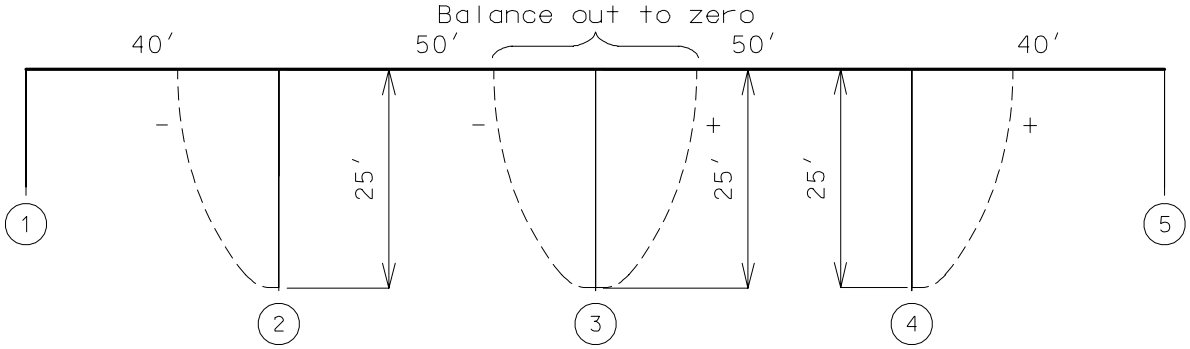

I (2 Columns, Column Diameter = 2.5′) = 3.835 ft^4
Thermal: Δ = 0.000006 x 30° x 50′ = 0.009′
Moment FEM = $3 \times 4 \times 10^6 \times 3.835 \times 12^2 \times 0.009/(25^2 \times 1000)$ = 95.4 ft.-kips
(minus @ Bent #2, plus @ Bent #4 and zero @ Bent #3)

3) Wind and longitudinal forces should be applied in accordance with Bridge Manual Section 1.3 assuming the following boundary conditions.

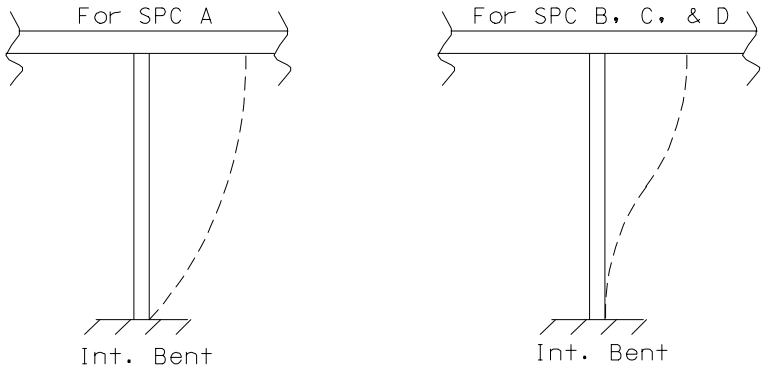

4) Distribution of longitudinal moments to columns.

Dead Load Moment: Compute total column moment at Bent. Distribute to columns in proportion to dead load reactions.

Volume Change Moment: Compute total column moment at bent. Distribute equally to each column.

Live Load + Impact Moment: Compute maximum total column moment (and compatible reaction) at bent using maximum number of loaded lanes for structure.

If number of loaded lanes exceeds two, use appropriate AASHTO load reduction factor.

Distribute total column moment equally to each column.

Distribute compatible reaction as a uniform load along ℄ Bent between curbs.

Compute column reactions using same method as for Dead Load reactions.

5) Sideways - Include corrections when they will materially increase design conditions.

6) Analyze columns for resultant of simultaneous longitudinal and transverse moments and reactions proportioned to bottom of drop panel.

INTEGRAL COLUMN BENTS WITH DROP PANEL

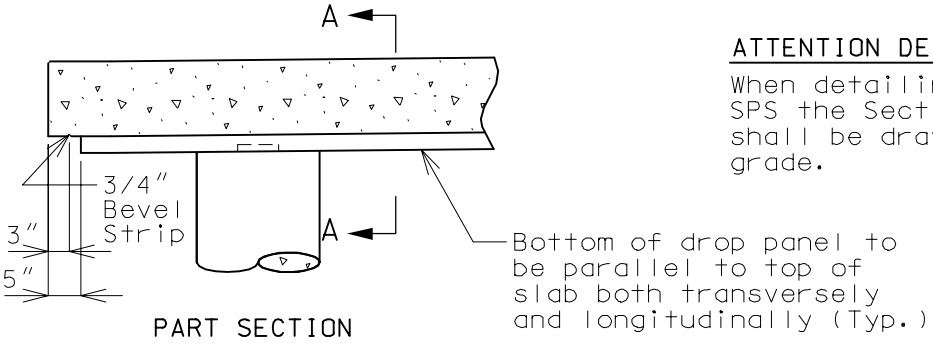

PART SECTION

ATTENTION DETAILER:

When detailing Int. Bents on SPS the Section thru drop panel shall be drawn to appropriate grade.

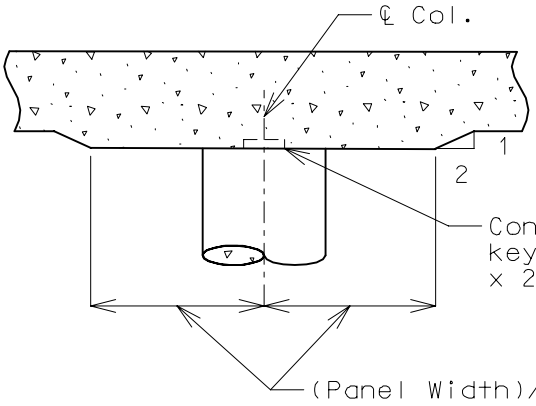

PART SECTION A-A
(FLAT)

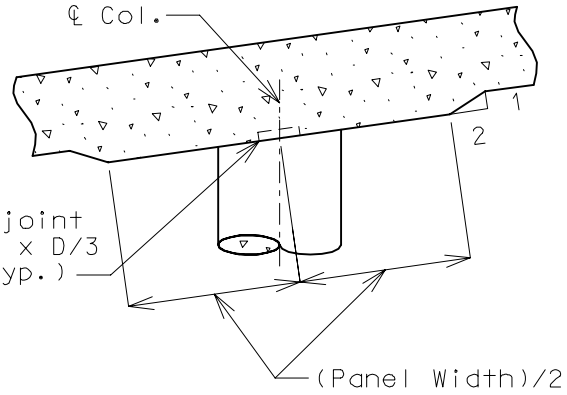

PART SECTION A-A
(GRADE OR V.C.)

D = Diameter of Column

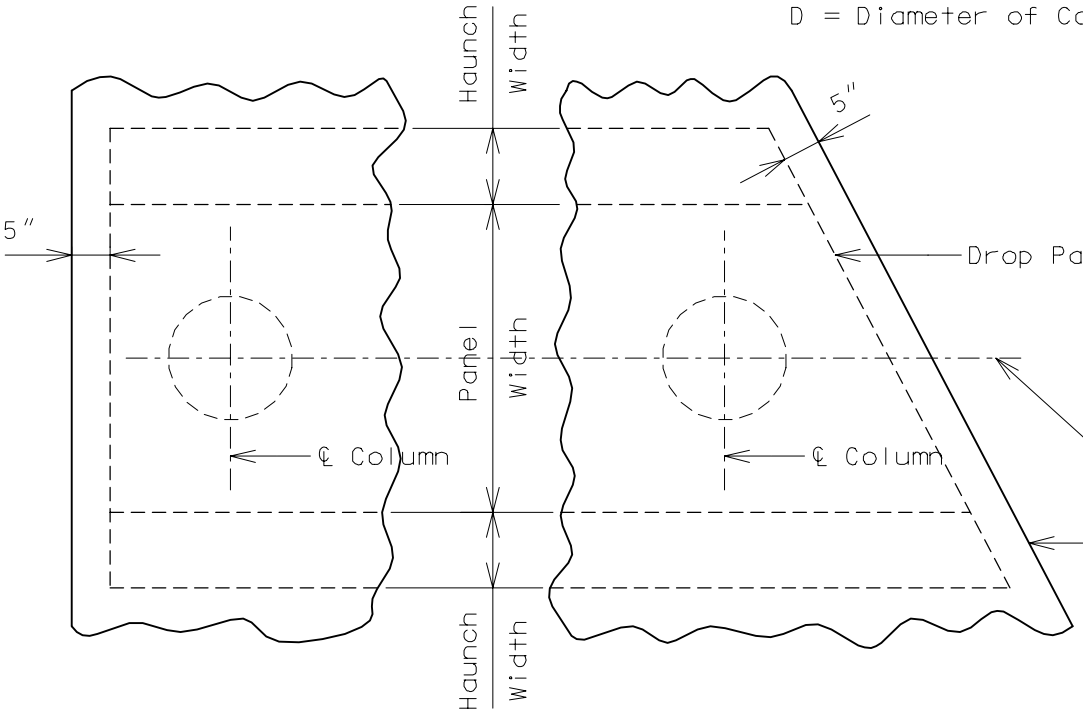

PART PLAN - SQUARE

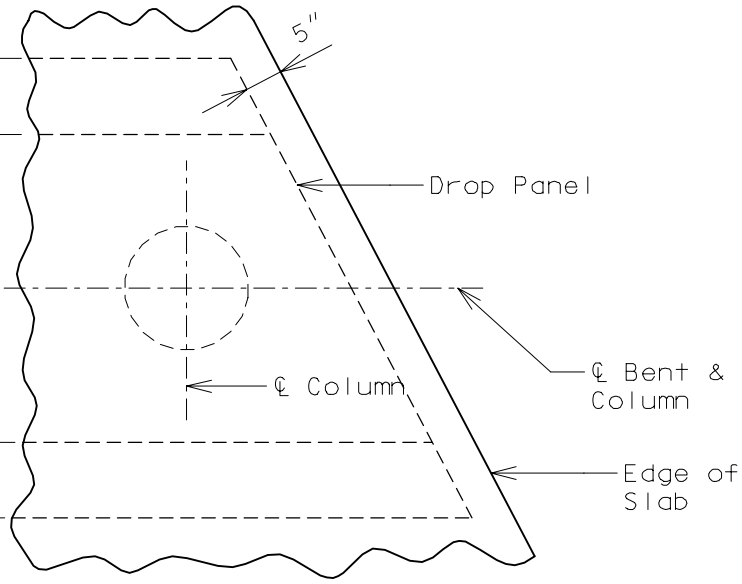

PART PLAN - SKEWED

INTEGRAL COLUMN BENTS WITH DROP PANEL (CONT.) Intermediate Bents

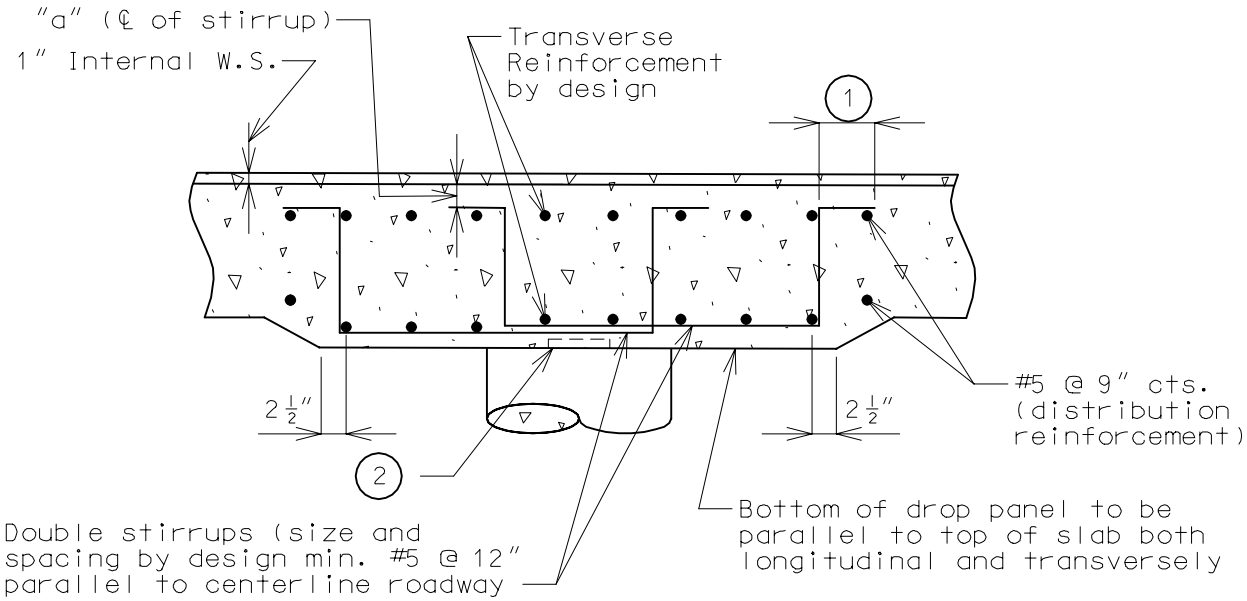

SECTION THRU DROP PANEL

Largest Longitudinal Slab Bar	"a"
#8	1-13/16"
#9, #10 & #11	2-1/16"
#14	2-9/16"

For Reference only

Largest Longitudinal Slab Bar	"a" (✳)
#8 & #9	2-5/8"
#10 & #11	2-7/8"
#14	3-3/8"

(✳) Based on 3" clearance and #6 stirrups, (includes Integral W.S.)to top longitudinal bar.

(1) Standard 90° Hook.

(2) Const. joint key D/3 x D/3 x 2", D = Diameter of Columm

Intermediate Bents

INTEGRAL PILE CAP BENTS WITH DROP PANEL

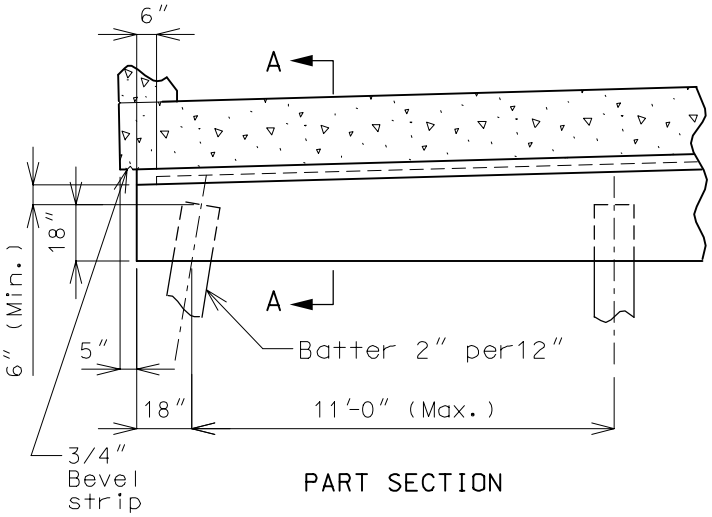

PART SECTION

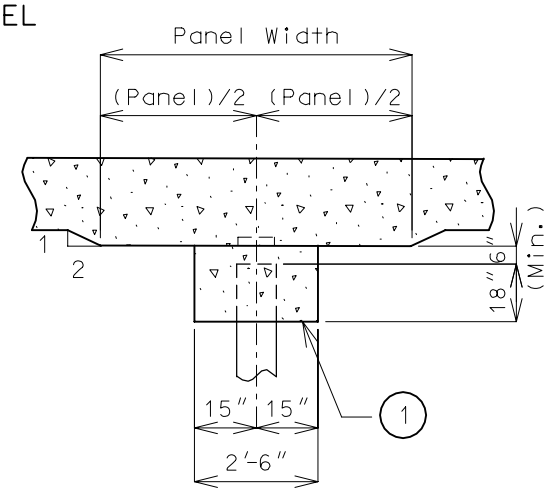

PART SECTION A-A
(FLAT)

Bottom of drop panel to be parallel to top of slab both transversely and longitudinally.

1. Horizontal except for superelevated structures.
2. Use 3″ Min. clip on beam for skews above 35°.

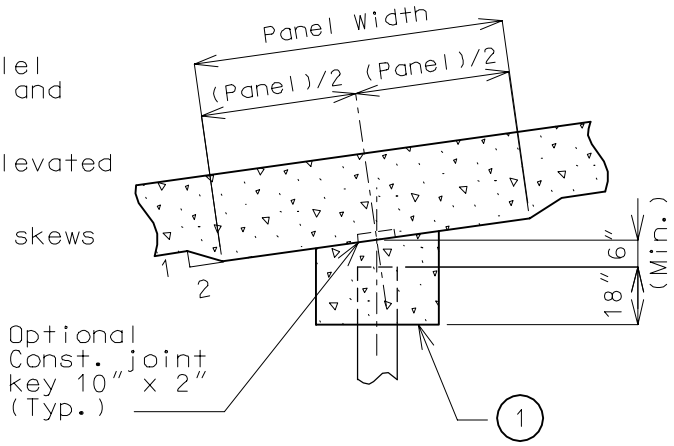

PART SECTION A-A
(GRADE OR V.C.)

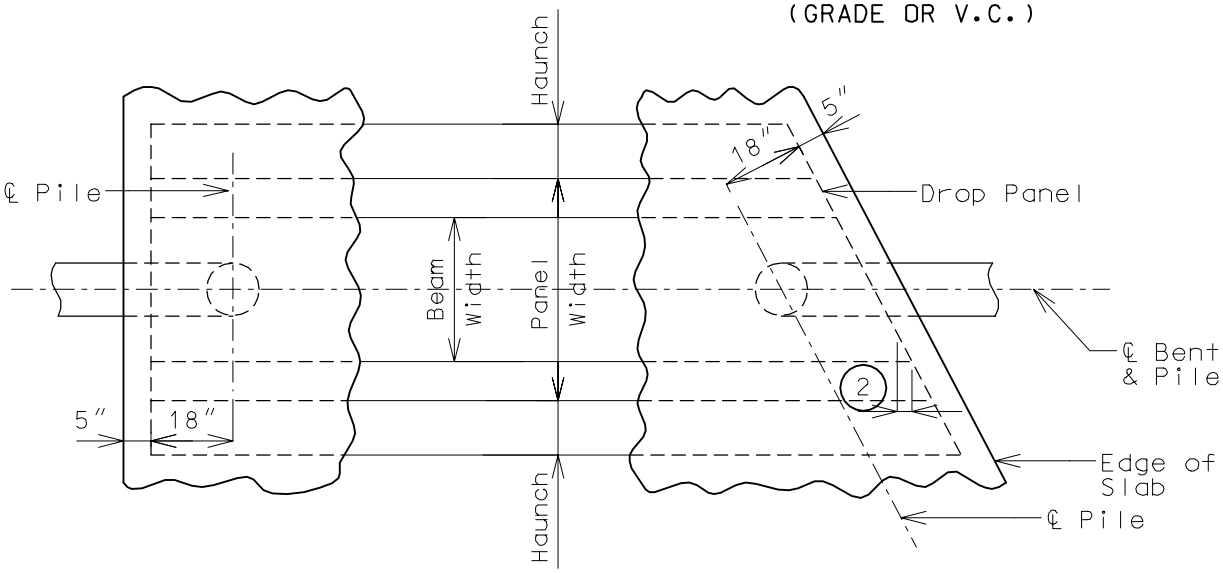

PART PLAN - SQUARE

PART PLAN - SKEWED

Intermediate Bents

INTEGRAL PILE CAP BENTS WITH DROP PANEL (CONT.)
REINFORCEMENT

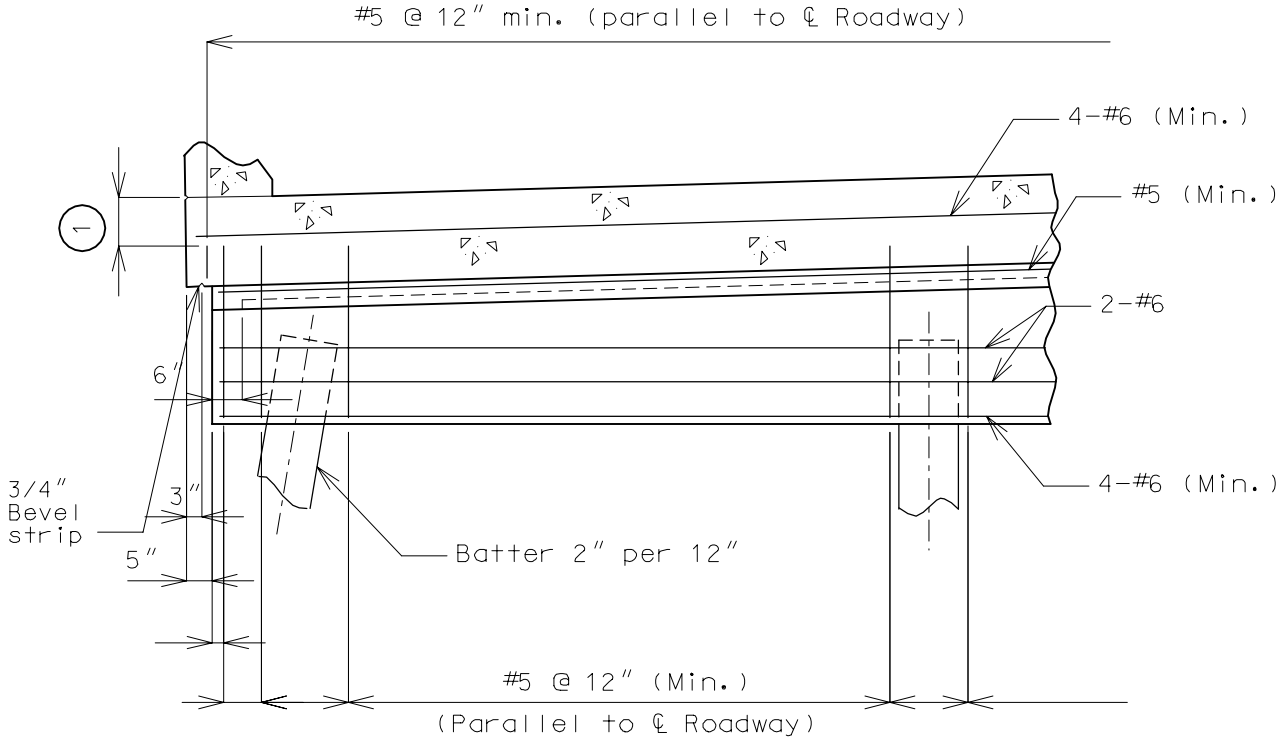

HALF SECTION

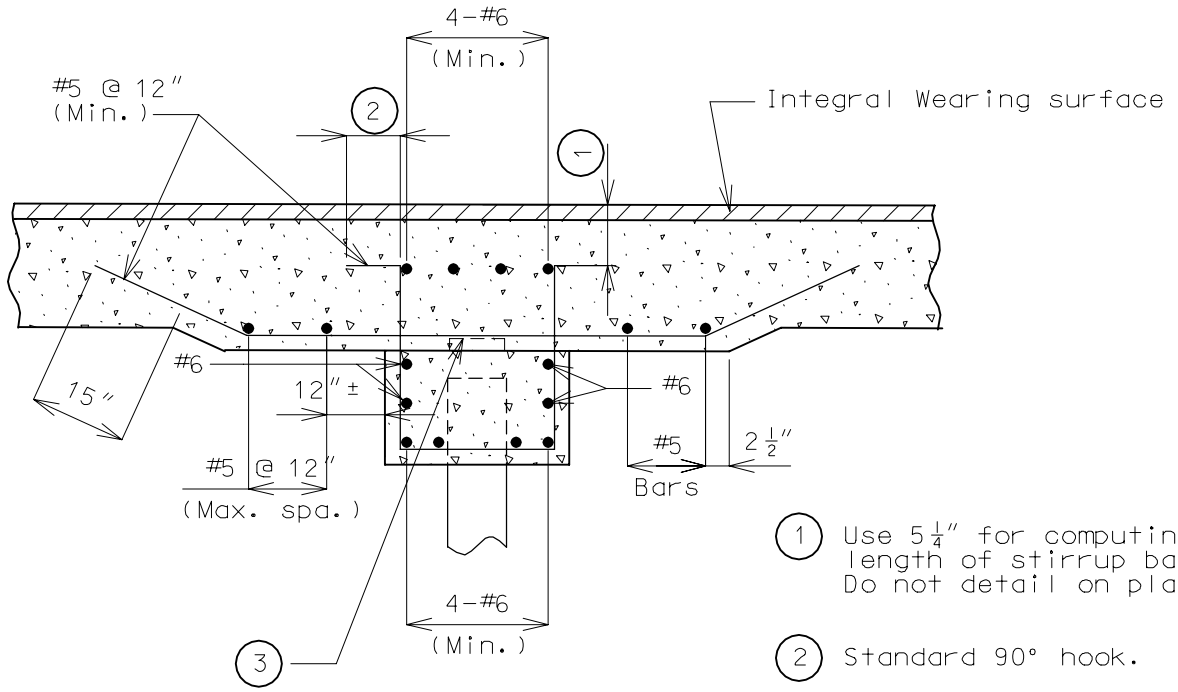

SECTION THRU DROP PANEL

1. Use $5\frac{1}{4}$″ for computing length of stirrup bar. Do not detail on plans.
2. Standard 90° hook.
3. Optional Const. Joint key 10″ x 2″

Intermediate Bents

INTEGRAL PILE CAP BENTS WITHOUT DROP PANEL REINFORCEMENT

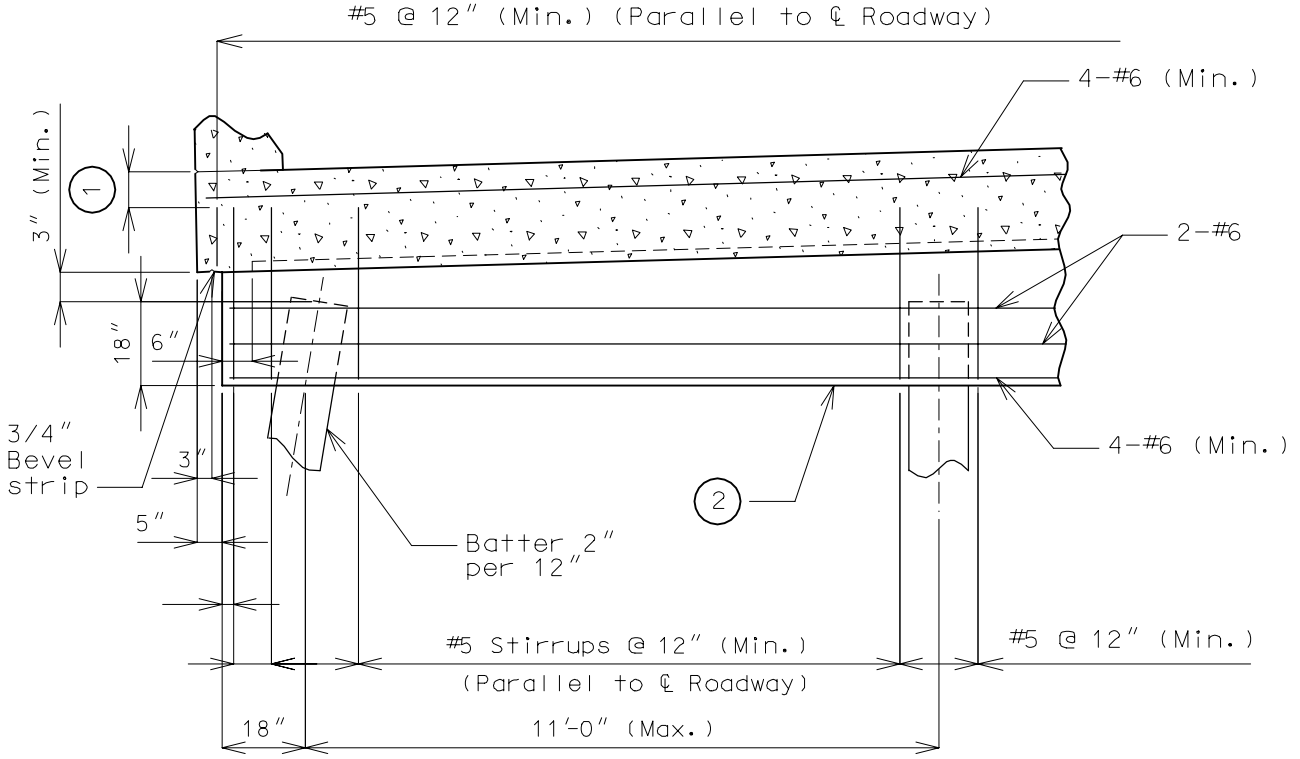

HALF SECTION

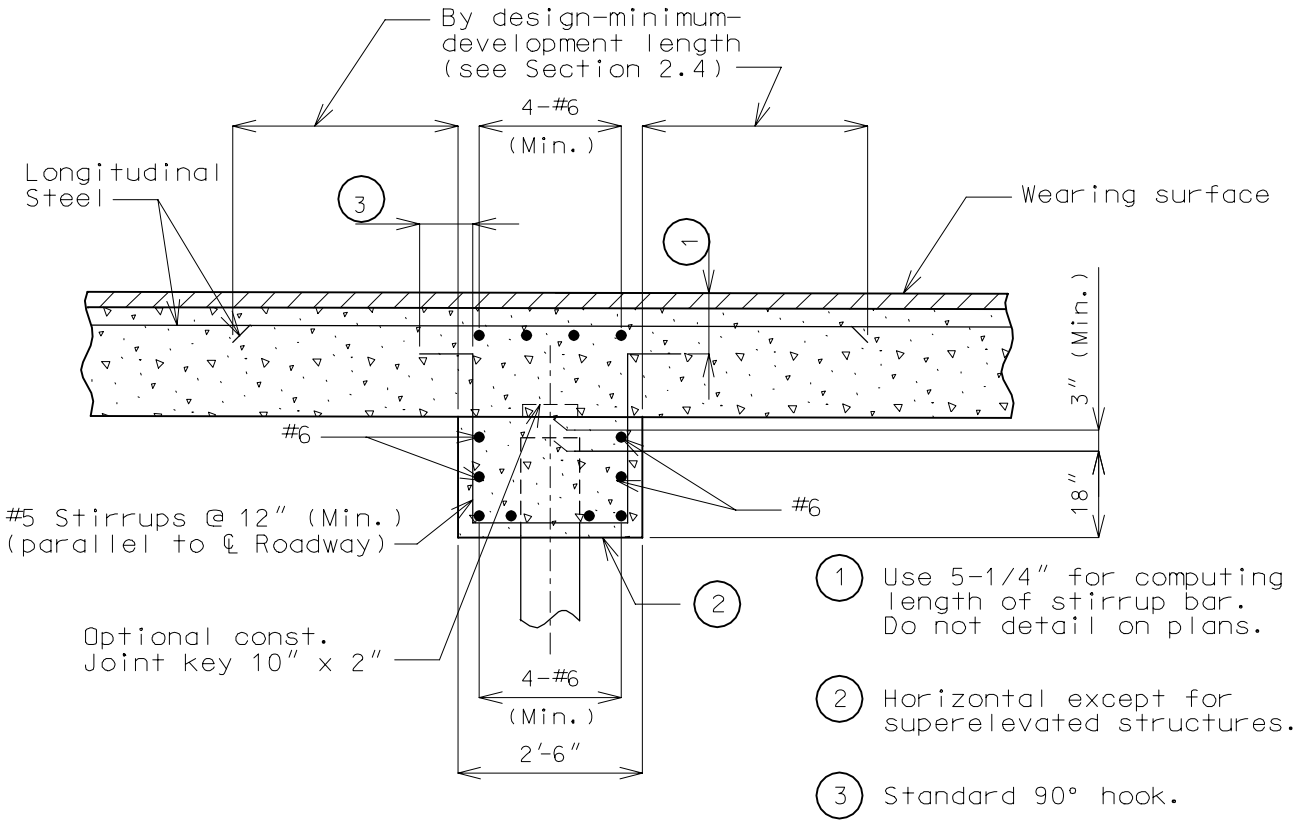

SECTION THRU BENT

PILE FOOTING DESIGN AND DETAILS

(1) GENERAL

Number, size and spacing of piling shall be determined by computing the pile loads and applying the proper allowable overstresses.

Cases of Loading (AASHTO Article 3.22)

Group I maximum vertical loads.

Group IV temperature and shrinkage moments with applicable vertical loads.

1983 AASHTO guide specifications for seismic design of highway bridges. (See chapter 4 for earthquake loads combined with applicable vertical loads.) (✳)

Internal stresses including the position of the shear line shall then be computed.

Long narrow footings are not desirable and care should be taken to avoid the use of an extremely long footing 6'-0" wide when a shorter footing 8'-3" or 9'-0" wide could be used.

When using the load factor design method for footings, design the number of piles needed based on the working stress design method.

ASSUMPTIONS

(Bents with 2 or more columns)

SEISMIC PERFORMANCE CATEGORY A

1) Dead and live load moments will be 25% of the moments used for slab and top of Column design.

2) Temperature moments shall be 50% of the moment at top of Column.

3) Column reinforcement to be same as that required at top of Column. footing dowel's to be #5 bars, same number as column bars.

4) Footings to be proportioned for conditions as specified. Do not use ratio of bent height as specified for Intermediate Bents for longitudinal footings dimensions.

SEISMIC PERFORMANCE CATEGORIES B, C & D

1) For Seismic Performance categories B, C & D, the connection between the bottom of Column and the footing is a fixed connection.

2) Footing design is based on Bridge Manual Section 6.1, subsection 3.1.7 (Seismic Design of Beam-Column Joint).

(✳) The design of all bridges in seismic performance B, C & D are to be designed by earthquake criteria in accordance with this bridge manual.

PILE FOOTING DESIGN AND DETAILS (CONT.)

(2) PILE LOADS

$P = N/n \pm M/S$

P = Pile Loads

N = Vertical Loads

n = number of piles

M = overturning moment
if minimum eccentricity controls the moment in both directions, it is necessary to use the moment in one direction (direction with less section modulus of Pile group) only for the footing check.

S = Section Modulus of pile group

AASHTO GROUP I AND IV LOADS

Maximum P = Pile Capacity
Minimum P = 0

Tension on a pile will not be allowed for any combination of forces.

Overstress reduction will not be used for loading minimums.

EARTHQUAKE LOADS

POINT BEARING PILES

(✱✱) Maximum P = Pile capacity x 2
(I.E. for HP 10 x 42 piles, maximum P = 56 x 2 = 112 tons/pile).

Minimum P = Use allowable uplift force specified for piles in Bridge Manual 3.71 under seal course design.

(✱✱) Two (2) is our normal factor of safety. Under earthquake loadings only the point bearing pile and rock capacities are their ultimate capacities.

FRICTION PILES

Maximum P = Pile capacity

Minimum P = Use allowable uplift force specified for piles in Bridge Manual 3.71 under seal course design.

See Bridge Manual Section 3.74 for combined axial and bending stresses in cast-in-place friction piles in liquefaction areas.

(3) INTERNAL STRESSES

A) Shear Line
B) Bending
C) Distribution of Reinforcement
D) Shear

(See Bridge Manual Section 3.71 for procedures and details.)

PILE FOOTING DESIGN AND DETAILS (CONT.)

(4) DIMENSIONS
(See Bridge Manual Section 3.71 for footing dimensions.)

(5) SEAL COARSE
(See Bridge Manual Section 3.71 for seal course design.)

(6) UNREINFORCED FOOTING - USE ONLY IN SPC A SEISMIC PERFORMANCE CATEGORY A (PINNED AT BOTTOM OF COLUMN)

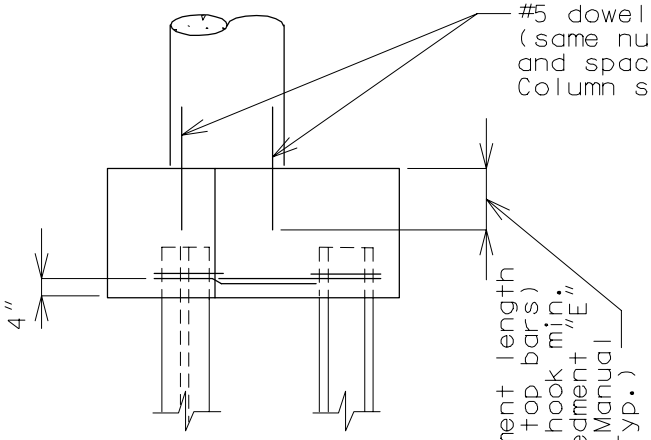

ELEVATION (3 PILE FOOTING)

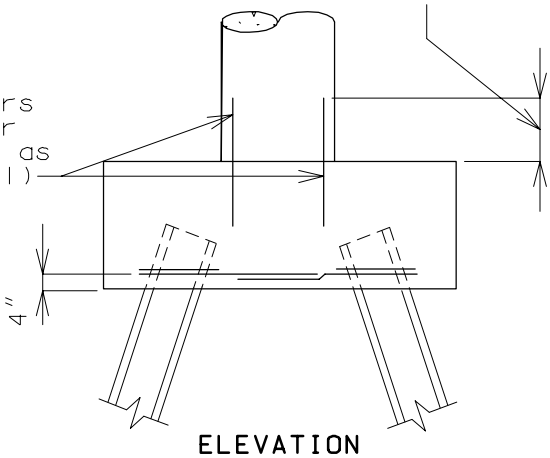

ELEVATION (4 PILE FOOTING)

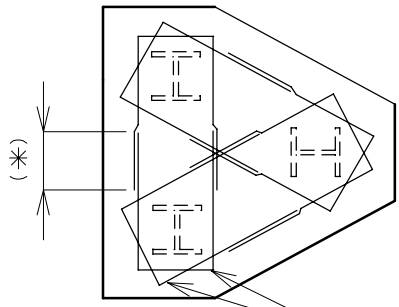

PLAN (3 PILE FOOTING) (USE HP10 X 42 ONLY)

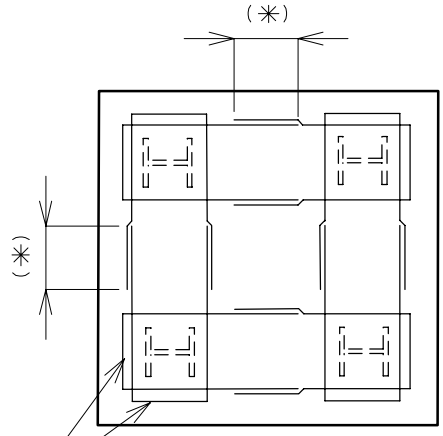

PLAN (4 PILE FOOTING)

(*) 2'-0" min. lap (2'-8" if used as stress steel) (Typ.)

Reinforcement not required by design. Hairpins are sufficient for reinforcing requirements.

The minimum percentage of reinforcement, "ρ" is not required to be met, unless scour is anticipated.

Note: Unreinforced footings should not be used in seismic performance categories B,C and D.

PILE FOOTING DESIGN AND DETAILS (CONT.)

(7) REINFORCED FOOTING
SEISMIC PERFORMANCE CATEGORY A
(PINNED AT BOTTOM OF COLUMN)

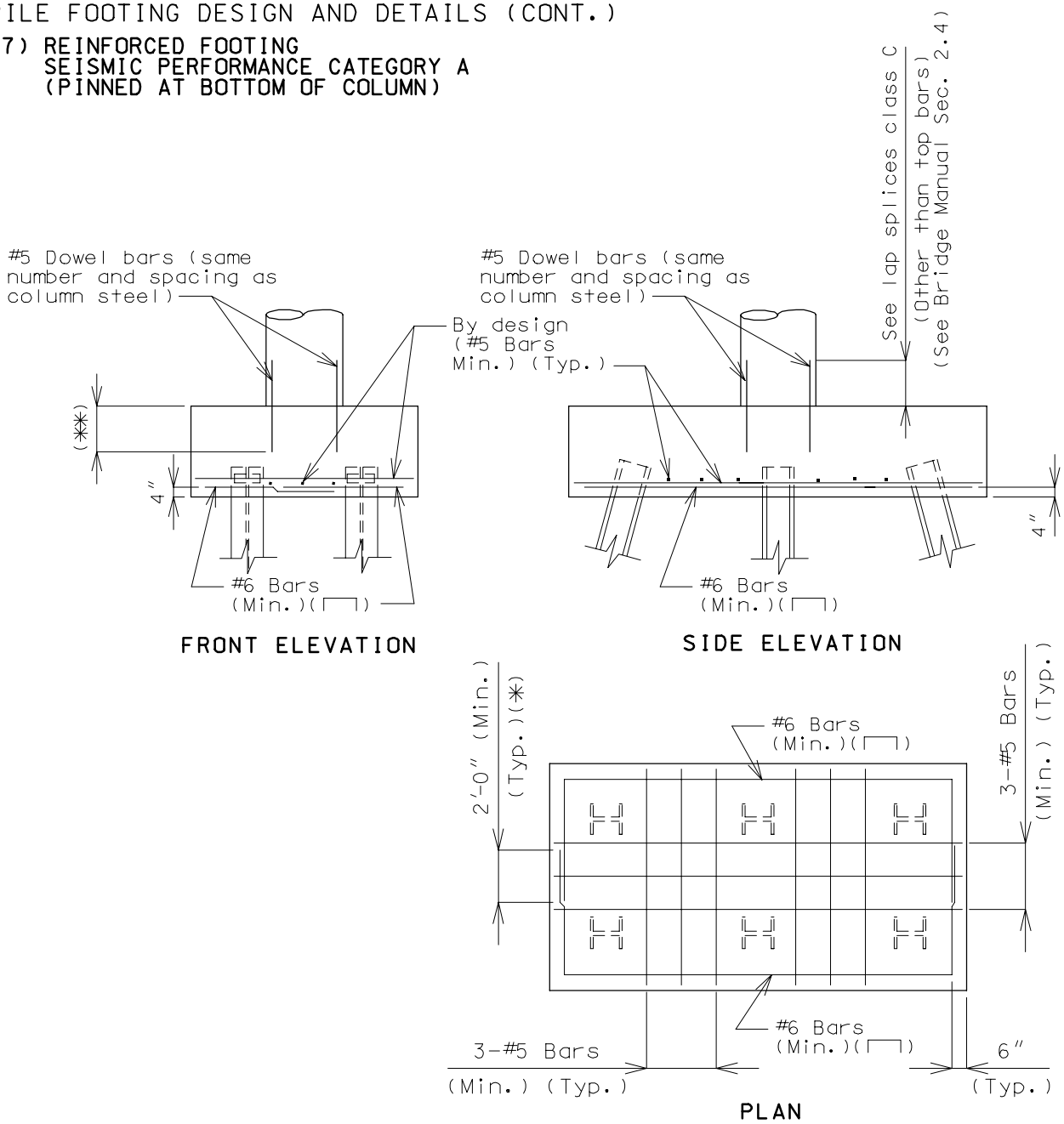

(✳) See lap splice class C (Other than top bars) - In manual Section 2.4. (2'-8" if used by stress steel).

(✳✳) See development length (other than top bars) or standard hook min. tension embedment Ldh (see Bridge Manual Sec. 2.4) (Typ.).

For footing reinforcement, the maximum size of stress steel allowed is #8 bars.

SEISMIC PERFORMANCE CATEGORIES B, C & D
(FIXED AT BOTTOM OF COLUMN)

See Bridge Manual section 3.71, for procedures and details.

Intermediate Bents

SPREAD FOOTING DESIGN AND DETAILS
(ROCK-SHALE-CLAY-ECT.)

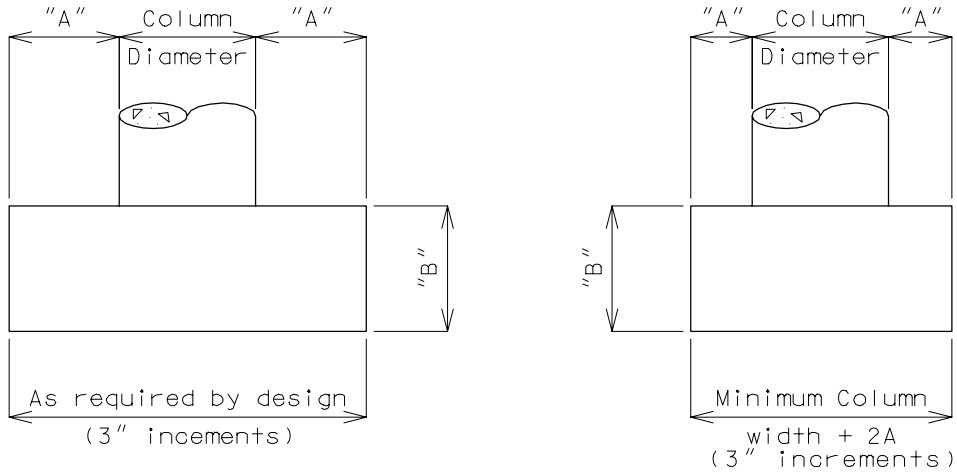

Superbase shall not be used except in special cases.

SIDE ELEVATION **FRONT ELEVATION**

"A" = 12" Minimum
"B" = Minimum of 2'-6" or Column Diameter, use larger.
Maximum of 4'-0" at 3" increments.

(1) GENERAL

Size of footing shall be determined by computing position of resultant and determining bearing pressure.
Allowable overstress reduction should be applied to bearing pressure only.

Cases of Loading (AASHTO Article 3.22)

Group I maximum vertical loads.

Group IV temperature and shrinkage moments with applicable vertical loads.

1983 AASHTO guide specifications for seismic design of highway bridges. (See chapter 4 for earthquake loads combined with applicable vertical loads.) (✳)

Internal stresses including the position of the shear line shall then be computed.

Long narrow footings are to be avoided, especially on foundation material of low capacity.

In general, the length to width ratio should not exceed 2.0, except on structures where the ratio of longitudinal to transverse loads or some other consideration makes the use of such a ratio impractical.

(✳) The design of all bridges in seismic performance B,C & D are to be designed by earthquake criteria in accordance with this bridge manual.

SPREAD FOOTING DESIGN AND DETAILS (CONT.)

(1) GENERAL (CONT.)

ASSUMPTIONS

(Bents with 2 or more columns)

SEISMIC PERFORMANCE CATEGORY A

1) Dead and live load moments will be 25% of the moments used for slab and top of column design.

2) Temperature moments shall be 50% of the moment at top of column.

3) Column reinforcement to be same as that required at top of column. footing dowel's to be #5 bars, same number as column bars.

4) Footings to be proportioned for conditions as specified. Do not use ratio of bent height as specified for Intermediate Bents for longitudinal footings dimensions.

SEISMIC PERFORMANCE CATEGORIES B, C & D

1) For Seismic Performance Categories B, C & D, the connection between the bottom of column and the footing is a fixed connection.

2) Footing design is based on Bridge Manual Section 6.1, subsection 3.1.7 (Seismic Design of Beam-Column Joint).

(2) POSITION OF RESULTANT

(See Bridge Manual Section 3.71 for procedures and details.)

(3) BEARING STRESSES

(See Bridge Manual Section 3.71 for procedures and details.)

(4) INTERNAL STRESSES

A) Shear Line
B) Bending
C) Distribution of Reinforcement
D) Shear

(See Bridge Manual Section 3.71 for procedures and details.)

SPREAD FOOTING DESIGN AND DETAILS (CONT.)

(5) REINFORCEMENT
SEISMIC PERFORMANCE CATEGORY A
(PINNED AT BOTTOM OF COLUMN)

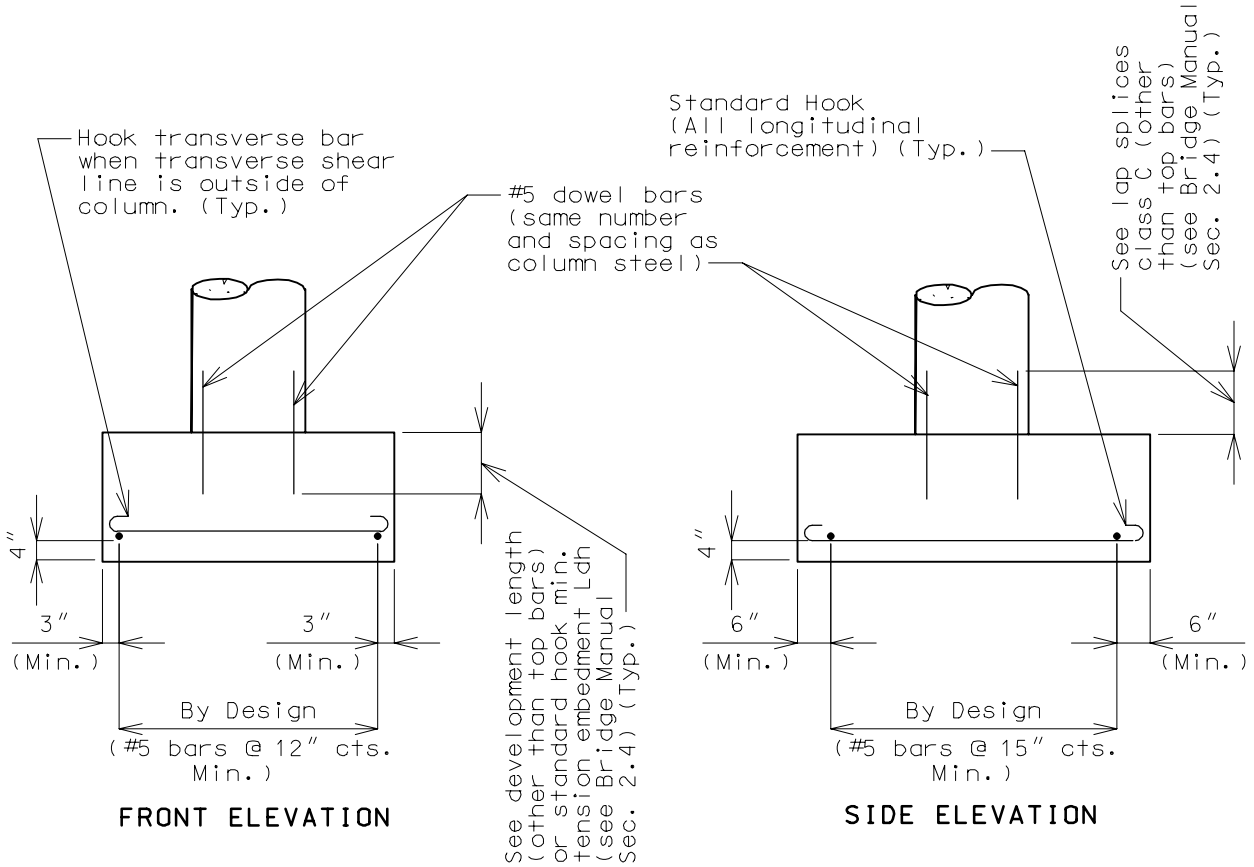

SEISMIC PERFORMANCE CATEGORIES B, C & D
(FIXED AT BOTTOM OF COLUMN)

(See Bridge Manual Section 3.71 for procedures and details.)

PEDESTAL PILE - GENERAL

SEISMIC PERFORMANCE CATEGORY A

1) Assume column to be "pinned" for belled footing sitting on rock. All loads will be axial.

2) Assume column to be fixed for pedestal pile embedded in rock.

3) All earth loads within the diameter of belled footing, or pedestal pile if there is no bell, above ground line shall be included in footing design.

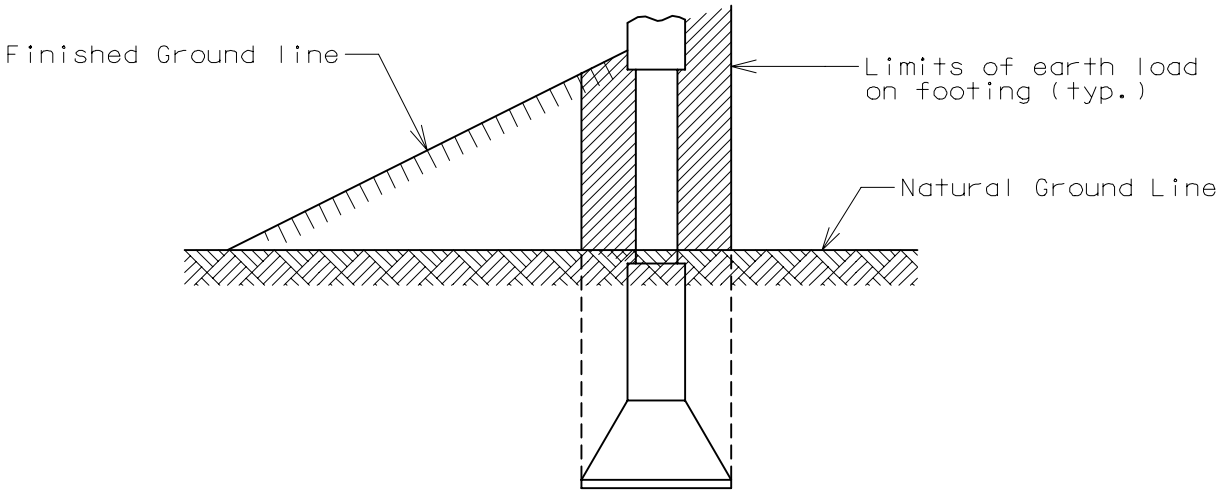

SEISMIC PERFORMANCE CATEGORIES B, C & D

See Bridge Manual Section 6.1, subsection 2.8 (Seismic Design).

PEDESTAL PILE - DETAILS
SEISMIC PERFORMANCE CATEGORY A

Intermediate Bents

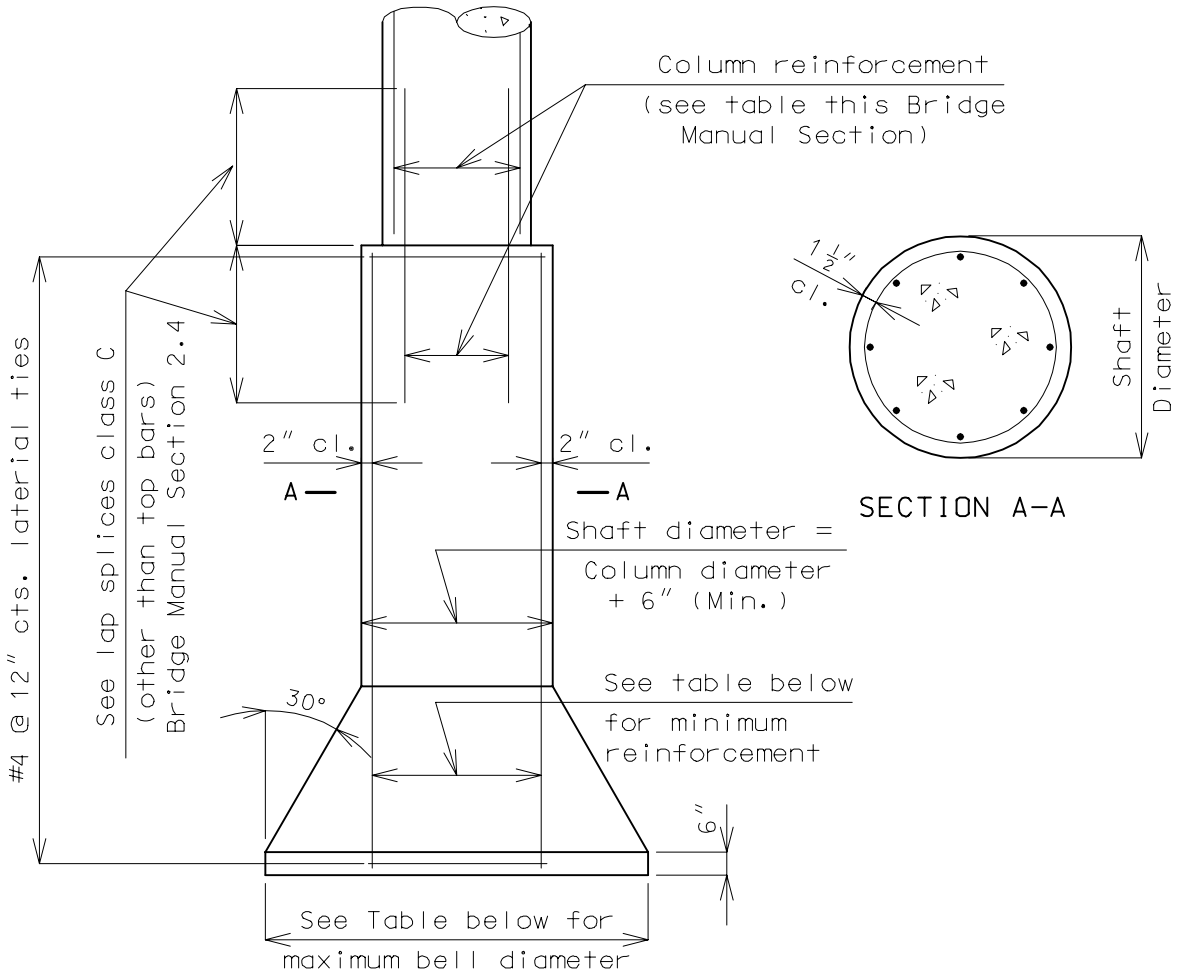

Diameter of Shaft	Minimum Bell Diameter	Maximum Bell Diameter	Minimum (✳) Reinf.	Cubic Yards Concrete per ft.
2'-0"	2'-4"	6'-0"	8-#7	0.1164
2'-6"	2'-10"	7'-6"	8-#9	0.1818
3'-0"	3'-6"	9'-0"	11-#9	0.2618
3'-6"	4'-0"	10'-6"	14-#9	0.3563
4'-0"	4'-6"	12'-0"	19-#9	0.4654
4'-6"	5'-0"	13'-0"	24-#9	0.5890
5'-0"	5'-6"	14'-0"	29-#9	0.7272
5'-6"	6'-0"	15'-0"	35-#9	0.8799
6'-0"	6'-6"	16'-0"	41-#9	1.0472

Concrete Quantities shown in table are per linear foot of shaft only. Bell Quantities are not included.

(✳) Amount of reinforcing may be increased from that shown to meet the individual job requirements.

Minimum reinforcement meets AASHTO Spec. 8.18 for reinforcement of compression members.

Intermediate Bents

PEDESTAL PILE - DETAILS
SEISMIC PERFORMANCE CATEGORIES B, C & D

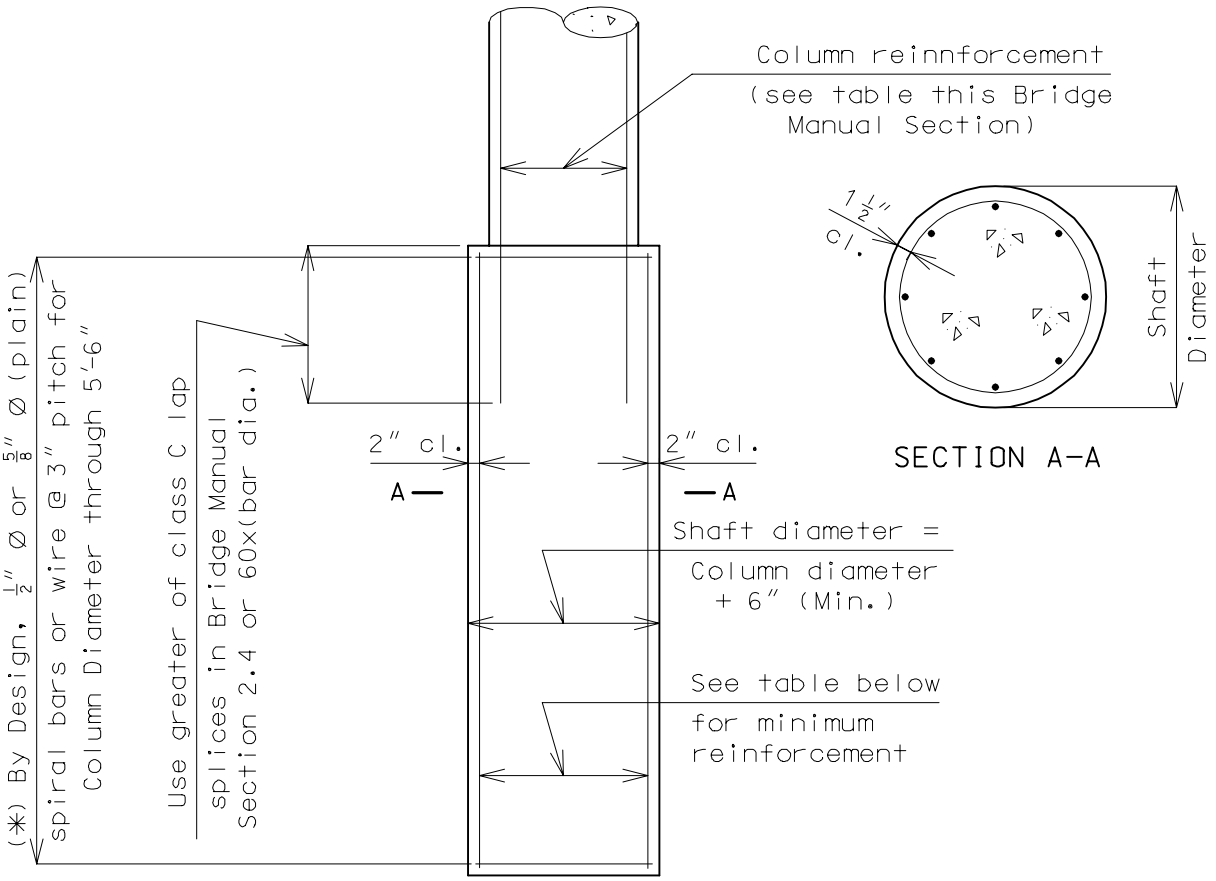

Diameter of Shaft	Minimum (✳) Reinf.	Cubic Yards Concrete per ft.
2'-0"	8-#7	0.1164
2'-6"	8-#9	0.1818
3'-0"	11-#9	0.2618
3'-6"	14-#9	0.3563
4'-0"	19-#9	0.4654
4'-6"	24-#9	0.5890
5'-0"	29-#9	0.7272
5'-6"	35-#9	0.8799

Concrete Quantities shown in table are per linear foot of shaft only.

(✳) Amount of reinforcing may be increased from that shown to meet the individual job requirements.
Minimum reinforcement meets AASHTO Spec. 8.18 for reinforcement of compression members.

(✳✳) Stay in place casing may be used in place of spirals for column diameters greater than 4 foot.

APPROACH HAUNCH DETAILS

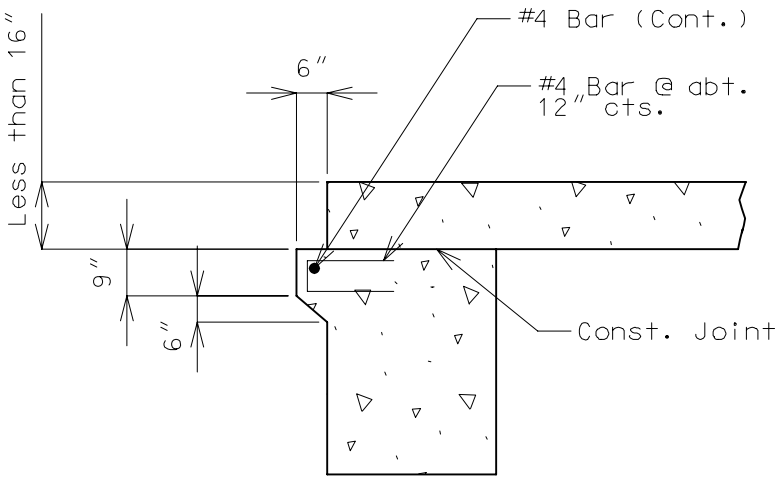

SLAB DEPTH LESS THAN 16″

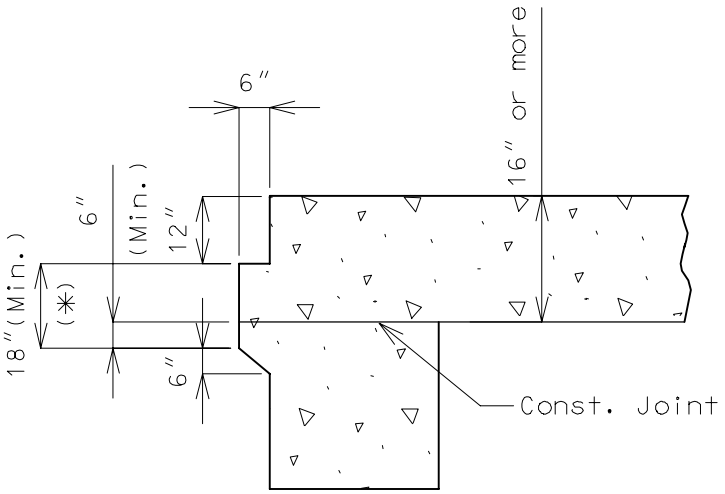

SLAB DEPTH 16″ OR MORE

(✳) Increase when necessary to maintain 6″ (Min.) below Const. Joint.