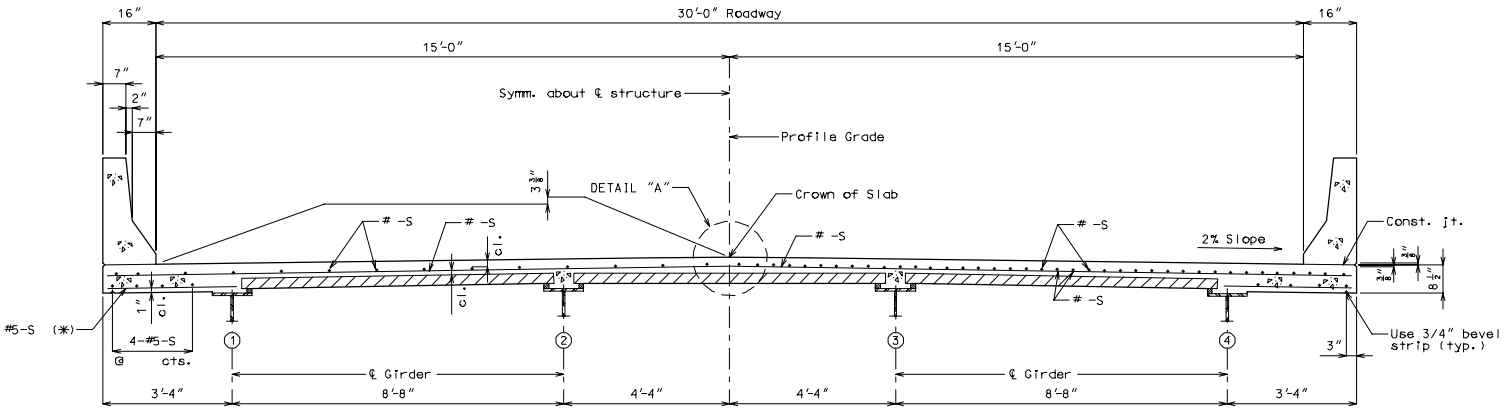

HALF SECTION NEAR ℄ SPAN HALF SECTION NEAR INTERMEDIATE BENT

30'-0" ROADWAY - 4 GIRDER (SYMM.)

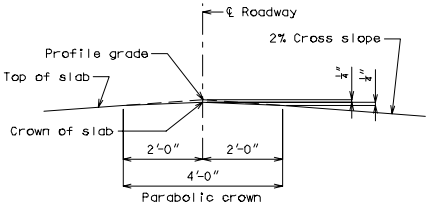

DETAIL "A"

(✳) Alternate bar shape available, see Safety Barrier Curb sheet.

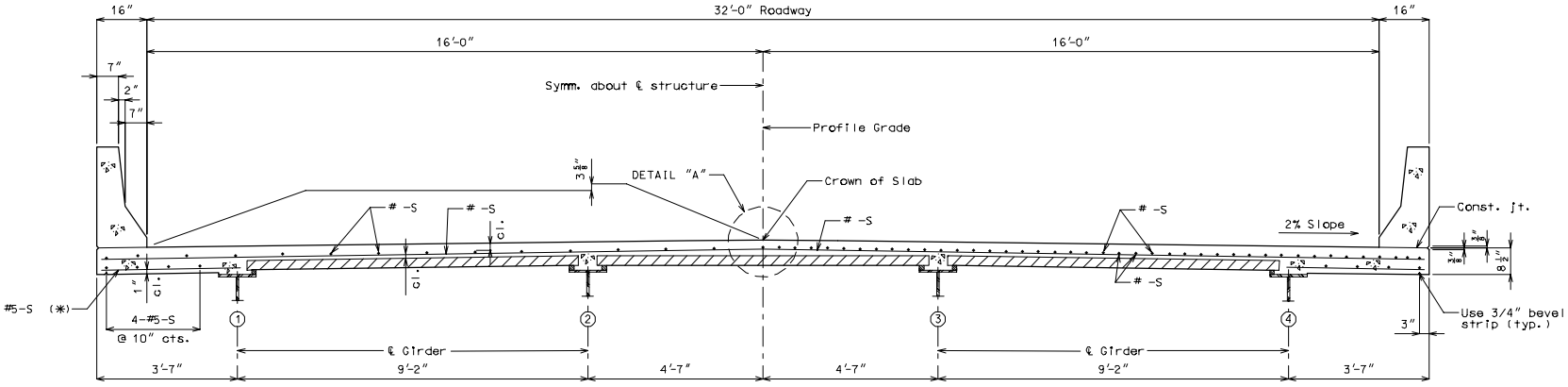

HALF SECTION NEAR ℄ SPAN HALF SECTION NEAR INTERMEDIATE BENT

32'-0" ROADWAY - 4 GIRDER (SYMM.)

SLAB 2