Detail "A" is available as a cell in the Settings Manager under Slab Sheets.

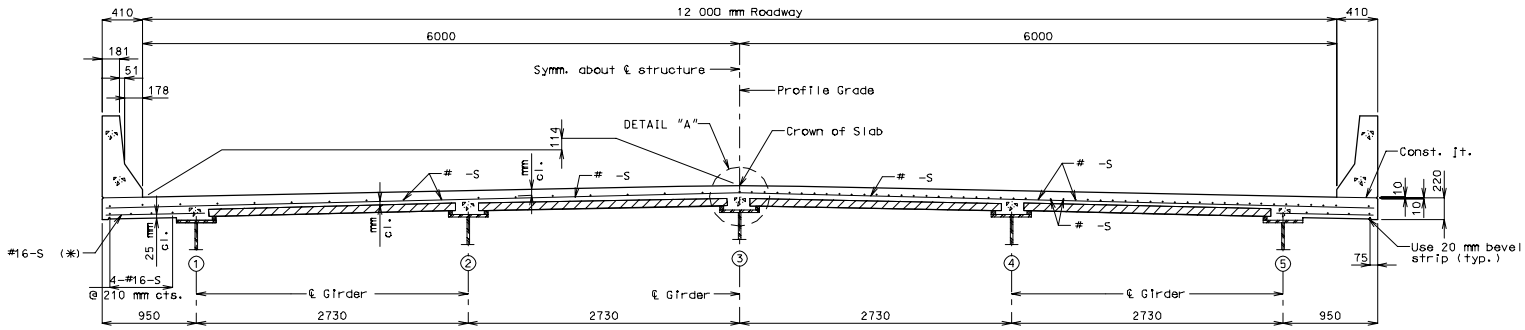

HALF SECTION NEAR ℄ SPAN

HALF SECTION NEAR INTERMEDIATE BENT

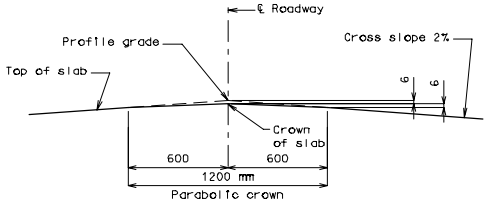

DETAIL "A"

12 000 mm ROADWAY - 5 GIRDER WITH NEW 410 mm SBC

Cell available in Settings Manager under Slab Sheets
Cell: SLN7M
Created at scale: 25

(*) Alternate bar shape available, see Safety Barrier Curb sheet.

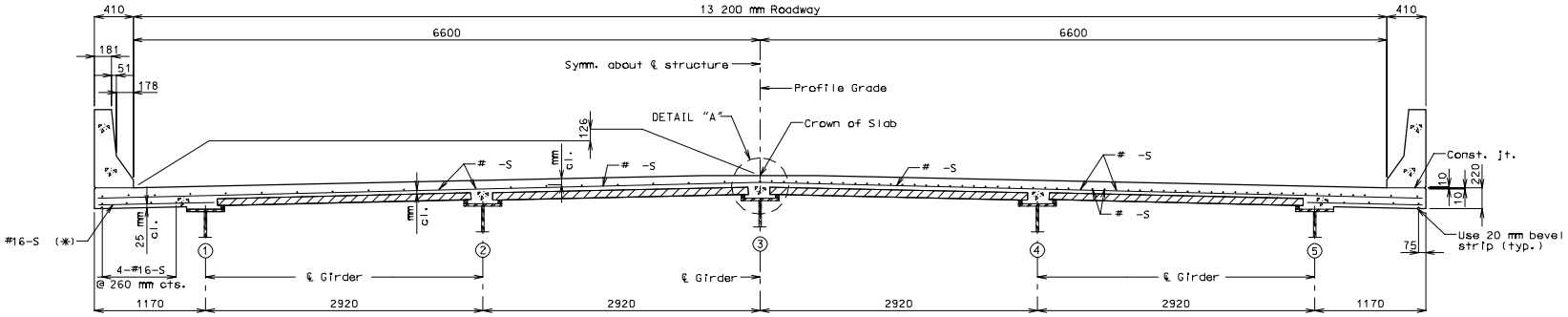

HALF SECTION NEAR ℄ SPAN

HALF SECTION NEAR INTERMEDIATE BENT

13 200 mm ROADWAY - 5 GIRDER WITH NEW 410 mm SBC

Cell available in Settings Manager under Slab Sheets
Cell: SLN7M
Created at scale: 25