STATE	PROJ. NO.	SHEET NO.
NO.		

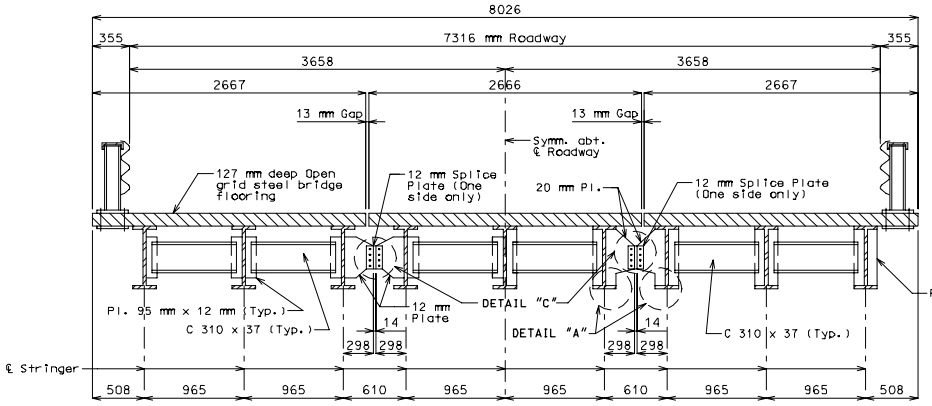

HALF SECTION NEAR INT. DIAPH. HALF SECTION NEAR BENTS

Steel bridge flooring shall be Greulich 127 mm RB/8.0, Reliance 127 mm Weldlock Type "H", or Foster 127 mm open steel bridge flooring. Trim bars will be required at the sides and ends of each 12 154 mm unit.

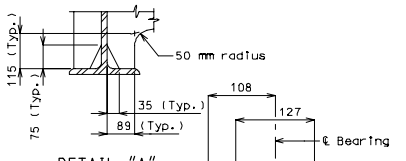

DETAIL "A"

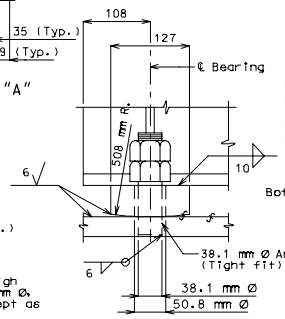

SIDE VIEW

Note:
Field connections, high strength bolts 22.2 mm Ø, holes 27.0 mm Ø, except as noted.

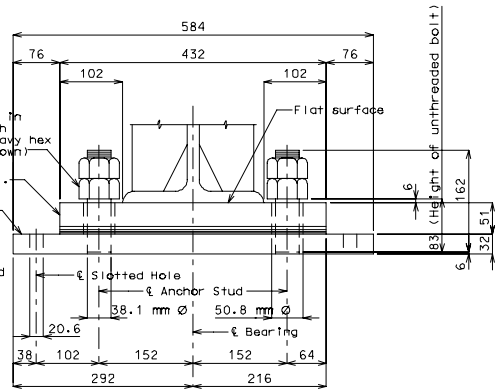

END VIEW

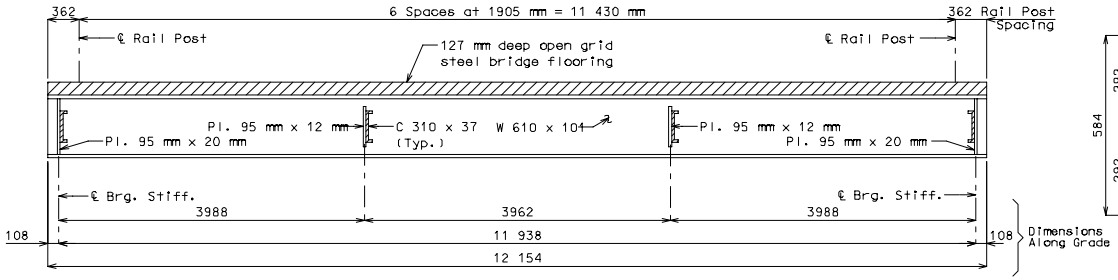

LONGITUDINAL SECTION - ALL SPANS

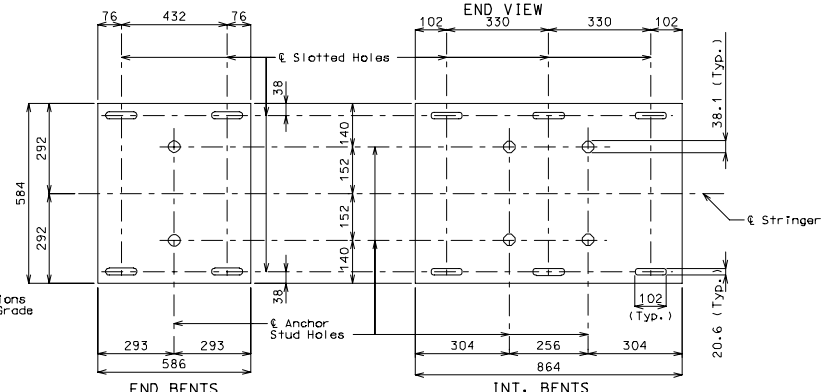

END BENTS INT. BENTS

PLAN OF BOTTOM PLATES

NO. REQUIRED
XX Top plates
XX Bott. plates (Int. Bents)
XX Bott. plates (End Bents)

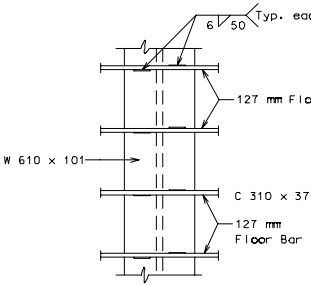

FLOORING TO STRINGER CONNECTION

(Typical Connection of Each Stringer)

Cross bars of steel grid floor are not shown for clarity.

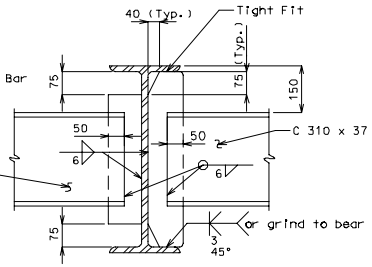

INT. DIAPH. BEARING STIFF.

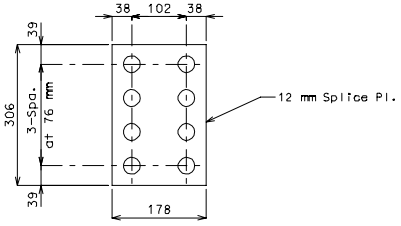

DETAIL "C"

DETAILS OF BEARINGS

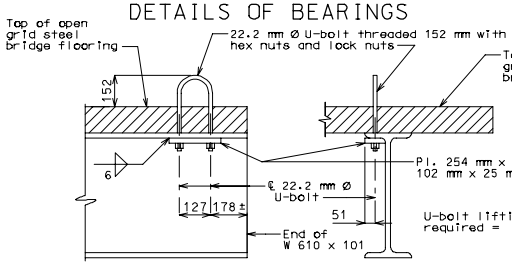

Note:
Use 27.0 mm Ø holes thru 254 mm x 102 mm x 25 mm plate and flange of W 610 x 101.

U-bolt lifting devices required =

SIDE VIEW END VIEW

DETAILS OF U-BOLTS LIFTING DEVICE

U-bolt lifting device to be on the inside top flange at both ends of each exterior stringer of each unit. U-bolts to be removed during the time the bridge is open to traffic. Position of U-bolt may be shifted slightly to miss bars in flooring.

CREATED IN MICROSTATION