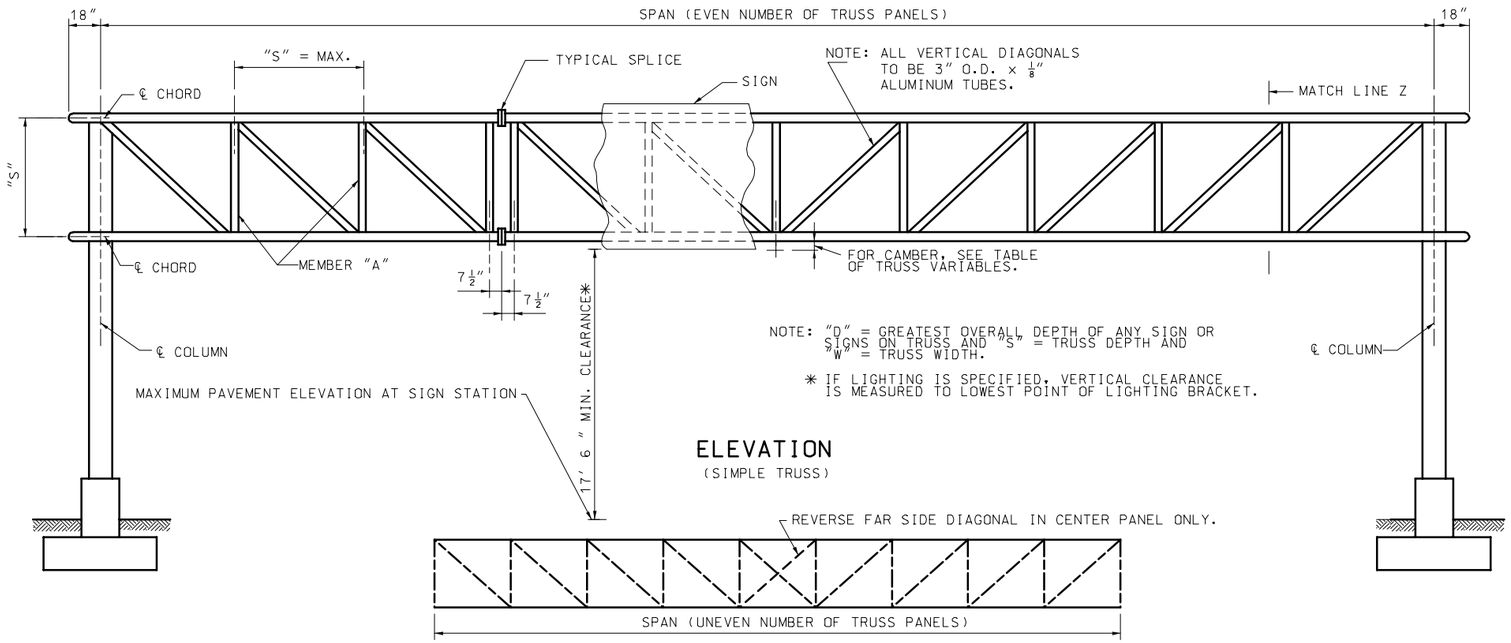

ELEVATION
(SIMPLE TRUSS)

TRUSS ELEVATION

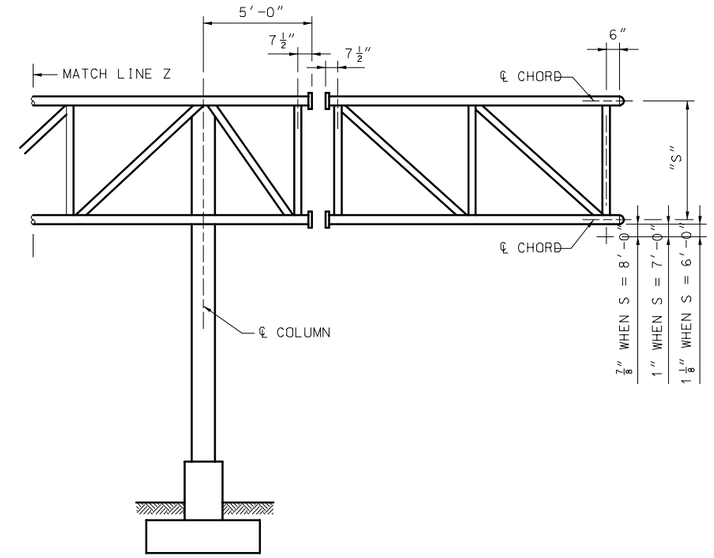

ELEVATION
(SIMPLE TRUSS MODIFIED FOR CANTILEVER SPAN)

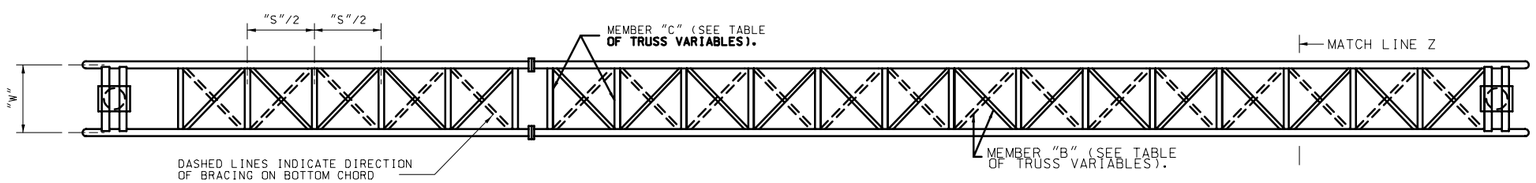

PLAN

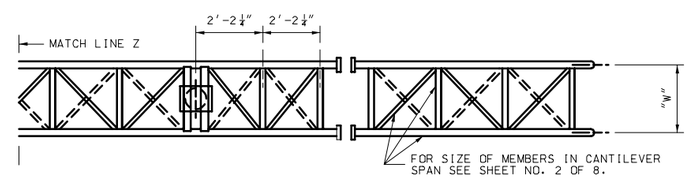

PLAN

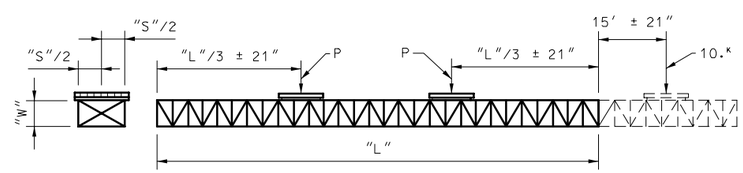

$$P = \frac{84aW}{L} - 0.02\,L$$ WHERE

- P = CONCENTRATED LOAD IN KIPS.
- a = AREA OF ONE CHORD TUBE IN SQUARE INCHES. (USE 0.76a FOR 4" DIA. x 1/4" AND 4-1/2" DIA. x 1/4" CHORDS)
- W = WIDTH OF TRUSS IN FEET.
- L = SPAN LENGTH IN FEET.

SAMPLE, GIVEN: a = 4.123 SQ. IN., W = 6'-0" AND L = 100'.

SOLUTION: $P = \frac{84 \times 4.123 \times 6.0}{100} - 0.02 \times 100 = 20.8 - 2 = 18.8^{K}$

NOTE: IF CANTILEVERED, REMOVE CONCENTRATED LOAD NEAREST CANTILEVER END AND LOAD CANTILEVER SPAN AS SHOWN ABOVE.

15' OR LESS CANTILEVER SPANS NEED NOT BE TESTED.

REPEAT ABOVE TESTS BY ROTATING 180° (TO SIMULATE WIND REVERSAL).

NO VERTICAL LOAD (D.L.) TEST WILL BE REQUIRED.

LOADS P SHALL NOT BE MORE THAN 16.K FOR SPANS LESS THAN 55 FEET AND 20.K FOR ALL OTHERS.

SIMULATED WIND-SHOP TEST LOADING

TRUSS VARIABLES

SPAN	"S"	"W"	MEMBER "A"	MEMBER "B"	MEMBER "C"	SHOP CAMBER
UP TO 70'-6"	6'-0"	5'-0"	2 1/2" DIA. x 1/8"	2 1/2" DIA. x 1/8"	1 3/4" DIA. x 1/8"	3/4"
71' TO 80'-6"	6'-0"	6'-0"	2 1/2" DIA. x 1/8"	2 1/2" DIA. x 1/8"	2" DIA. x 1/8"	1 1/4"
81' TO 90'-6"	6'-0"	6'-0"	2 1/2" DIA. x 1/8"	2 3/4" DIA. x 1/8"	2" DIA. x 1/8"	1 1/2"
91' TO 100'-6"	6'-0"	6'-0"	2 1/2" DIA. x 1/8"	2 3/4" DIA. x 1/8"	2" DIA. x 1/8"	2 1/4"
101' TO 110'-6"	7'-0"	7'-0"	2 1/2" DIA. x 1/8"	3" DIA. x 1/8"	2 1/4" DIA. x 1/8"	2 1/2"
111' TO 120'-6"	7'-0"	7'-0"	2 1/2" DIA. x 1/8"	3 1/2" DIA. x 1/8"	2 1/4" DIA. x 1/8"	2 3/4"
121' TO 130'-6"	7'-0"	7'-0"	3" DIA. x 1/8"	3 1/2" DIA. x 1/8"	2 1/4" DIA. x 1/8"	3 3/4"
131' TO 140'-6"	8'-0"	7'-0"	3" DIA. x 1/8"	3 3/4" DIA. x 1/8"	2 1/2" DIA. x 1/8"	3"
141' TO 150'-6"	8'-0"	7'-0"	3" DIA. x 1/8"	3 3/4" DIA. x 1/8"	2 3/4" DIA. x 1/8"	3 3/4"
151' TO 160'-6"	8'-0"	7'-0"	3" DIA. x 1/8"	3 3/4" DIA. x 1/8"	2 3/4" DIA. x 1/8"	4 1/2"

NOTE: FOR SIZE OF CHORD MEMBERS, SEE DATA SHEET.

SHOP CAMBER MAY BE PARABOLIC OR STRAIGHT, BUT SHALL BE SYMMETRICAL ABOUT CENTERLINE OF SPAN.

GENERAL NOTES:

ALL STRUCTURAL STEEL AND COLUMN BASE PLATES ASTM A36.

ALL ANCHOR BOLTS ASTM A307.

PROPOSED FIELD SPLICES SHALL BE SHOWN ON SHOP DRAWINGS FOR APPROVAL OF THE ENGINEER.

TRUSSES SHALL BE FABRICATED WITH A MINIMUM OF SPLICING IN TRUSS CHORDS.

FIELD SPLICING WILL NOT BE PERMITTED WITHIN THE MIDDLE ONE-THIRD OF SPAN.

PERMISSIBLE VENT HOLES (MAXIMUM 1/8" DIAMETER) SHALL BE PLACED A MINIMUM OF 3" FROM WELD ON LOW SIDE OF HORIZONTAL, VERTICAL AND DIAGONAL TUBES.

FOR ADDITIONAL INFORMATION SEE DATA SHEET.

MISSOURI HIGHWAYS AND TRANSPORTATION COMMISSION

OVERHEAD SIGN TRUSSES
ALUMINUM

DATE:_____ | EFFECTIVE: 04-01-2005 | 903.10Z | 1/6

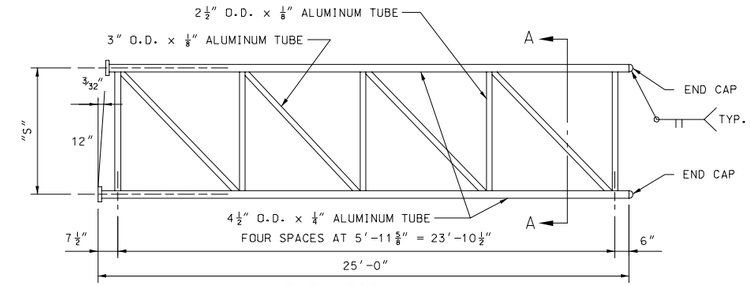

ELEVATION

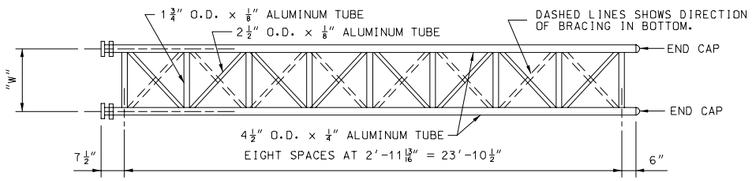

PLAN

25' - CANTILEVER SECTIONS

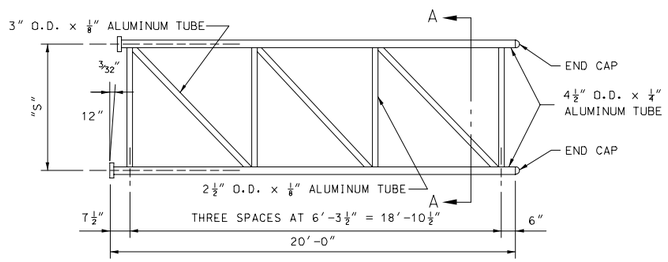

ELEVATION

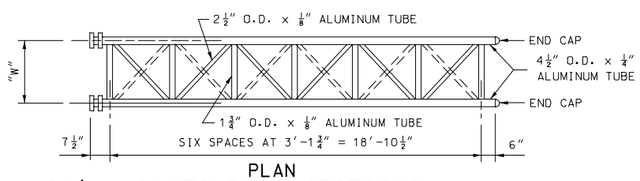

PLAN

20' - CANTILEVER SECTIONS

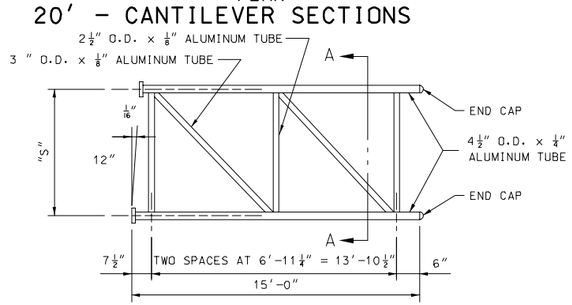

ELEVATION

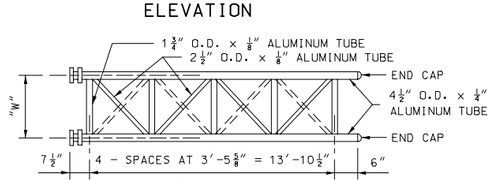

PLAN

15' - CANTILEVER SECTIONS

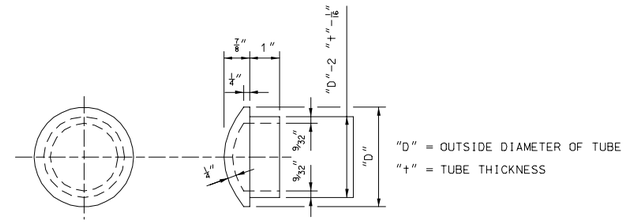

DETAIL OF END CAP CASTING (DRIVE FIT TYPE)

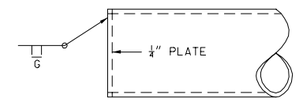

DETAIL OF ALTERNATE END CAP

NOTE: WHEN THE VERTICALS, STRUTS AND SWAYS OBSTRUCT THE PLACING OF BOLTS IN THE FLANGES THESE MEMBERS MAY BE MOVED BACK IN ORDER TO CLEAR THE BOLTS. (ONE SIDE OF SPLICE ONLY).

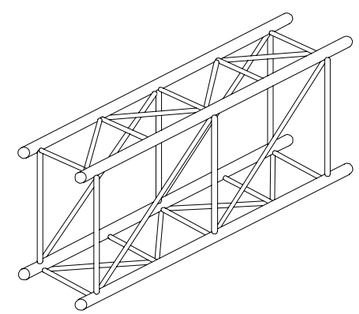

TYPICAL ISOMETRIC VIEW OF TRUSS

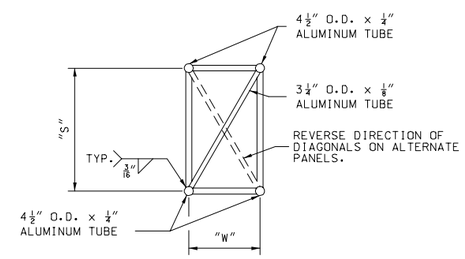

SECTION A-A

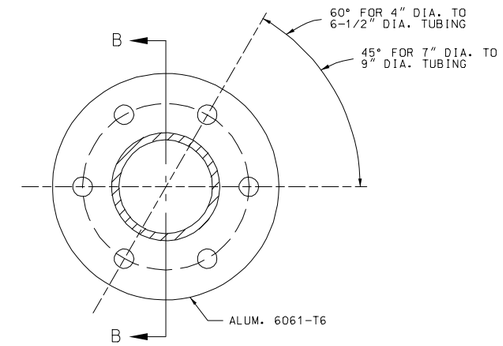

PLAN OF FLANGE PLATE

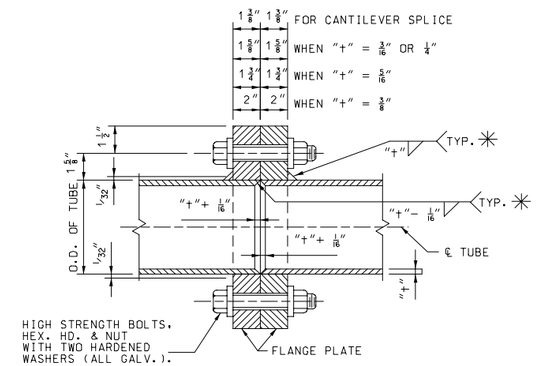

✳ "t" = SMALLER TUBE WALL THICKNESS.

SECTION B-B

NOTE: A WELDING SEQUENCE ASSURING FULL CONTACT OF FLANGE FACES SHALL BE REQUIRED.
DRILL OR REAM FLANGE HOLES 1/16" LARGER THAN NORMAL DIAMETER OF BOLTS OR TUBING.

TUBE SIZE	BOLT NO. AND DIA.	TORQUE
4" DIA. TO ALL DIAMETERS	6-3/4" DIA.	320 FT.LB. OR ONE-HALF TURN
4-1/2" DIA. THRU 6-1/2" DIA.	6-3/4" DIA.	320 FT.LB. OR ONE-HALF TURN
7" DIA. THRU 7-1/2" DIA.	8-3/4" DIA.	320 FT.LB. OR ONE-HALF TURN
8" DIA. THRU 9" DIA.	8-7/8" DIA.	470 FT.LB. OR ONE-HALF TURN

MISSOURI HIGHWAYS AND TRANSPORTATION COMMISSION

OVERHEAD SIGN TRUSSES

ALUMINUM

DATE:_____ | EFFECTIVE: 04-01-2005 | 903.10Z | 2/6

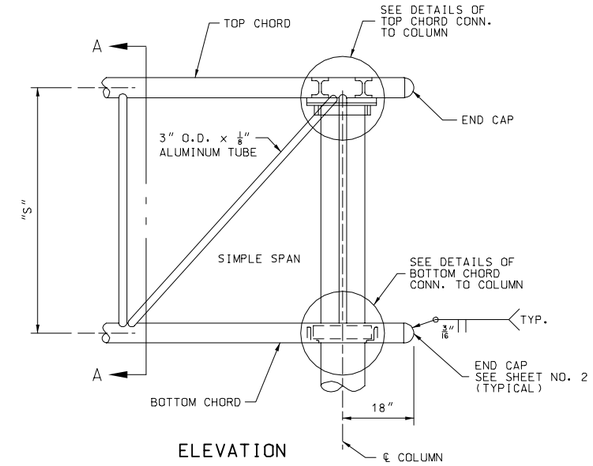

ELEVATION

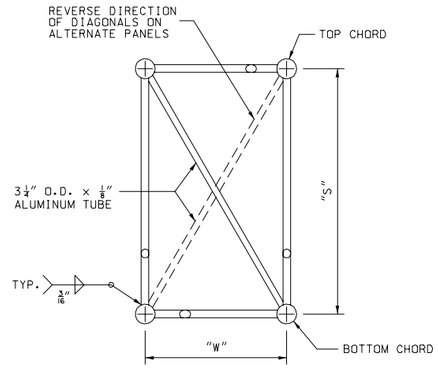

SECTION A–A

NOTE: FOR DIMENSIONS "S" AND "W" SEE SHEET NO. 1

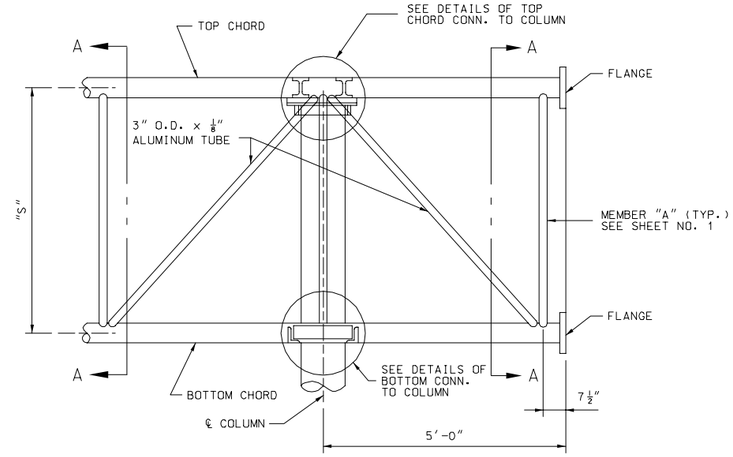

ELEVATION

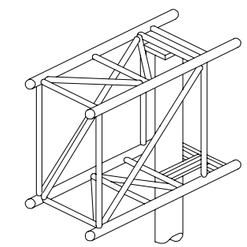

TYPICAL ISOMETRIC VIEW OF END SECTION

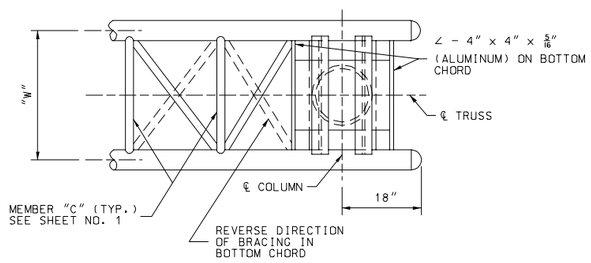

PLAN

TRUSS END WITHOUT CANTILEVER

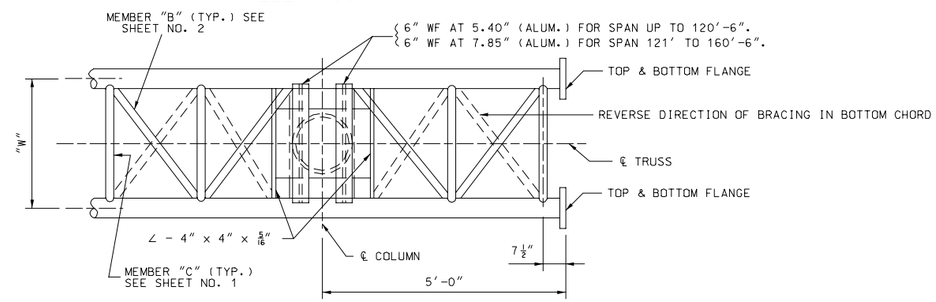

PLAN

TRUSS END MODIFIED FOR CANTILEVER

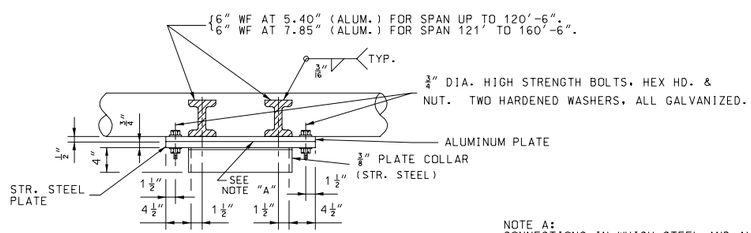

SECTION B–B

NOTE A:
CONNECTIONS IN WHICH STEEL AND ALUMINUM ARE IN CONTACT SHALL BE PROTECTED AS FOLLOWS:
ONE COAT ZINC CHROMATE ON ALUMINUM SURFACES.
NORMAL CLEANING AND PAINTING ON STEEL SURFACES.
NO ZINC CHROMATE REQUIRED IF STEEL IS GALVANIZED.

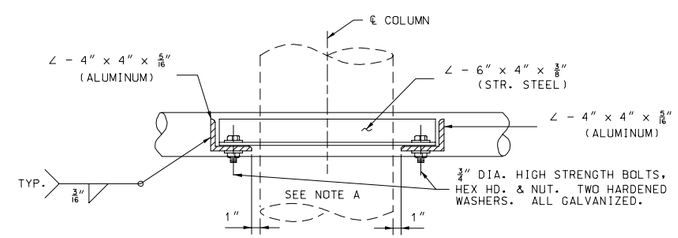

SECTION C–C

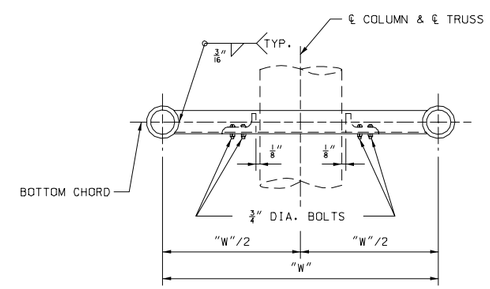

END ELEVATION

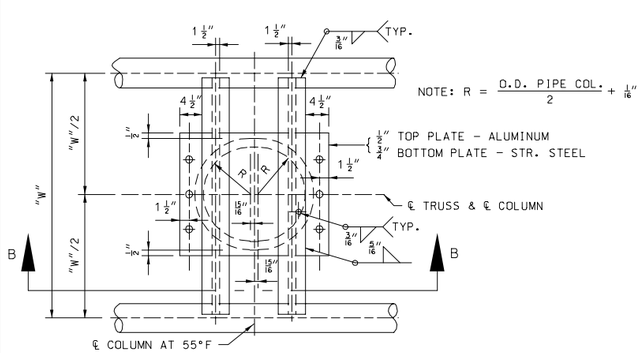

PLAN

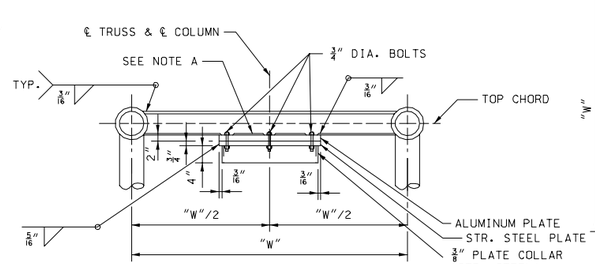

END ELEVATION

DETAIL OF TOP CHORD CONNECTION TO COLUMN

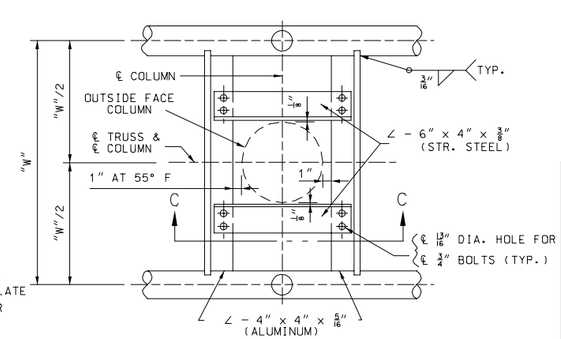

PLAN

DETAILS OF BOTTOM CHORD CONNECTION TO COLUMN

MISSOURI HIGHWAYS AND TRANSPORTATION COMMISSION

OVERHEAD SIGN TRUSSES

ALUMINUM

DATE:_____ EFFECTIVE: 04-01-2005 **903.10Z** 3/6

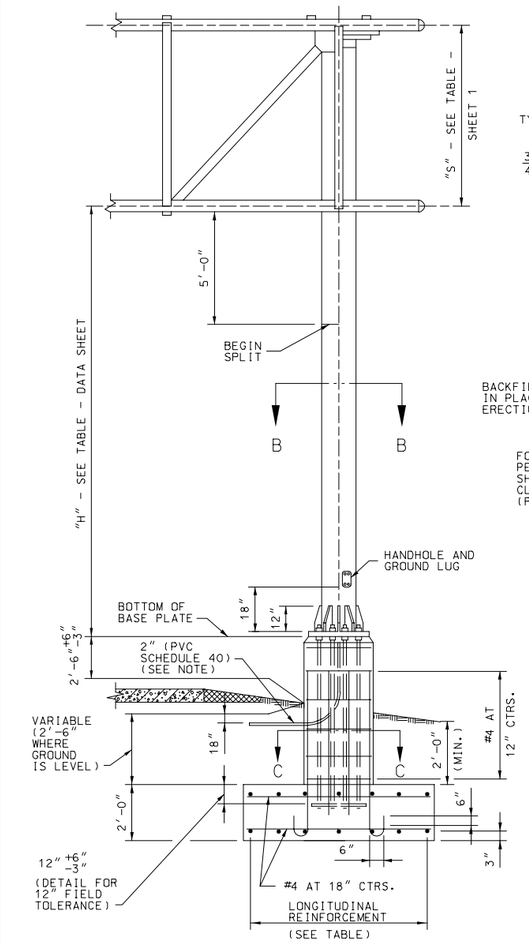

NOTE: THE 2" CONDUIT IN THE CONCRETE PEDESTAL SHALL BE PVC SCHEDULE 40 AND SHALL BE PLACED WITH A MINUMUM RADIUS BEND OF 9-1/2".

ELEVATION

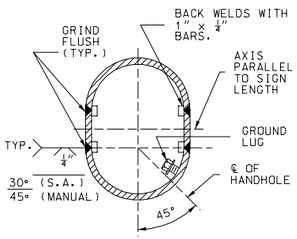

SECTION B-B
(FOR SPLIT COLUMNS ONLY)

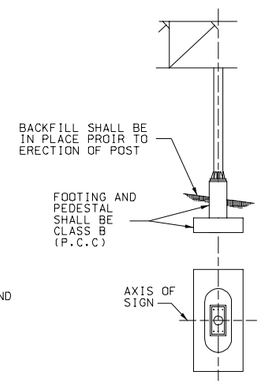

DETAIL SHOWING AXIS OF SIGN

PART SECTION E-E

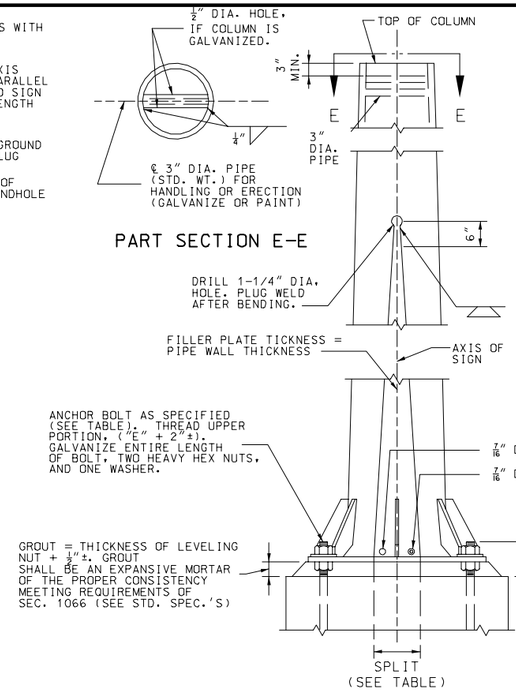

PART ELEVATION

POST TYPE	PIPE COLUMN	DIMEN-SION "E"	SPLIT	BASE PLATE SIZE✱	ANCHOR BOLTS DIA.	PEDESTAL SIZE ✱		FOOTING SIZE ✱	LONGITUDINAL FOOTING REINFORCEMENT		CON-CRETE CU.YDS
						a	b		TOP	BOTTOM	
I	12" STD. AT 65.42	8-1/2"	6"	2'-6" x 23" x 1-1/2"	6 AT 2-1/4"	4'-0"	2'-11"	7'-0" x 14'-6"	7 - #5 BARS	7 - #6 BARS	10.9
II	14" O.D. AT 72.09	8-1/2"	9-1/2"	3'-0" x 2'-0" x 1-1/2"	6 AT 2-1/4"	4'-4"	3'-0"	8'-0" x 16'-0"	8 - #5 BARS	9 - #6 BARS	13.2
III	16" O.D. AT 82.77	8-3/4"	11-1/2"	3'-4" x 2'-2" x 1-3/4"	6 AT 2-1/4"	4'-8"	3'-2"	8'-6" x 17'-6"	9 - #5 BARS	9 - #7 BARS	15.2
IV	18" O.D. AT 93.45	9-1/2"	12-1/2"	3'-7" x 2'-4" x 2"	6 AT 2-1/2"	5'-1"	3'-4"	9'-6' x 19'-0"	10 - #5 BARS	10 - #8 BARS	18.1
V	20" O.D. AT 104.13	9-1/2"	13"	3'-10" x 2'-9" x 2"	8 AT 2-1/2"	5'-4"	3'-9"	10'-0" x 20'-0"	10 - #5 BARS	10 - #8 BARS	20.6
VI	24" O.D. AT 125.49	9-1/2"	10-1/2'	4'-0' x 3'-3" x 2"	8 AT 2-1/2"	5'-6"	4'-3"	10'-6" x 21'-0"	11 - #5 BARS	11 - #8 BARS	23.3
VII	24" O.D. AT 125.49	9-1/2"	13-1/2"	4'-3" x 3'-3" x 2"	8 AT 2-1/2"	5'-9"	4'-3"	11'-0" x 22'-0"	11 - #5 BARS	11 - #9 BARS	25.1

✱ BASE PLATES, PEDESTAL, AND FOOTINGS, LONGER SIDES SHALL BE NORMAL TO AXIS OF SIGN.

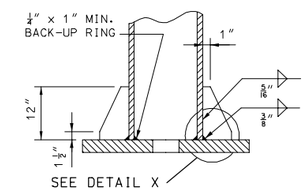

PART SECTION A-A

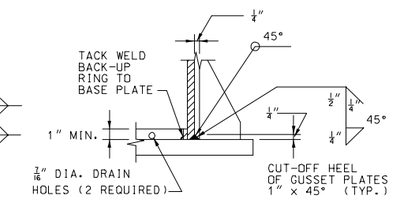

DETAIL X

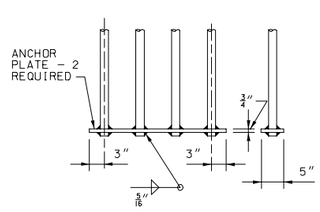

(SHOWN FOR 4 BOLTS – SIMILAR FOR 3 BOLTS)

ANCHORAGE DETAIL A

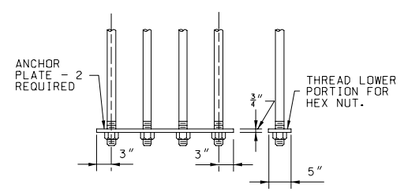

(SHOWN FOR 4 BOLTS – SIMILAR FOR 3 BOLTS)

ANCHORAGE DETAIL B
(OPTIONAL)

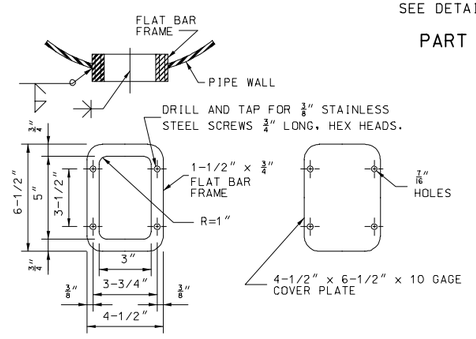

HANDHOLE AND COVER DETAIL
NOTE: HANDHOLE REQUIRED ONLY IN POWER COLUMN.

GENERAL NOTES:

A TAPERED TUBE OF EQUIVALENT SIZE AND THICKNESS MAY BE SUBSTITUTED FOR PIPE POST.

ALL STEEL PIPE COLUMNS SHALL BE EITHER GRADE "B" SEAMLESS STEEL PIPE OR GRADE "B" ELECTRIC RESISTANCE WELDED STEEL PIPE; A.S.T.M. SPECIFICATION A53. NO OBJECTIONABLE SEAMS WILL BE PERMITTED.

ALL STRUCTURES SHALL BE GROUNDED.

BURR THREADS ON ALL ANCHOR BOLTS.

A HORIZONTAL WELDED SPLICE MAY BE FABRICATED IN THE COLUMN BETWEEN THE TOP OF PIPE AND 4'-0" BELOW THE BOTTOM CHORDS OF THE TRUSS WHEN DETAILED ON THE SHOP DRAWINGS AND APPROVED BY THE ENGINEER.

GROUND LUGS SHALL BE LOCATED INSIDE COLUMN NEAR HAND HOLE.

QUANTITIES FOR PEDESTAL, BASED ON NOMINAL HEIGHT OF 5'-0".

QUANTITIES FOR FOOTING, BASED ON NOMINAL DEPTH OF 2'-0".

QUANTITIES SHOWN ARE FOR ONE COLUMN ONLY.

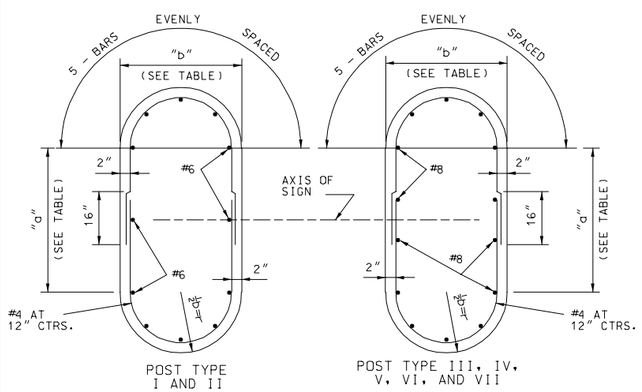

POST TYPE I AND II

POST TYPE III, IV, V, VI, AND VII

SECTION C-C
(TYPICAL SECTION SHOWING REINFORCING STEEL)

NOTE: FOR DETAILS OF ALTERNATE PEDESTAL, SEE SHEET NO. 5 OF 6.

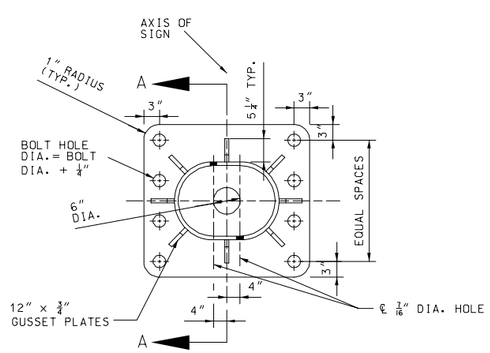

8 ANCHOR TYPE

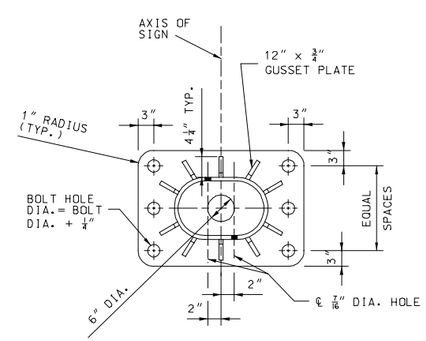

6 ANCHOR TYPE

TYPICAL BASE PLATES

MISSOURI HIGHWAYS AND TRANSPORTATION COMMISSION

OVERHEAD SIGN TRUSSES

ALUMINUM

DATE:_____ | EFFECTIVE: 04-01-2005 | 903.10Z | 4/6

NOTE:
THE 2" CONDUIT IN THE CONCRETE PEDESTAL SHALL BE PVC. SCHEDULE 40 AND SHALL BE PLACED WITH A MIN. RADIUS BEND OF 9-1/2".

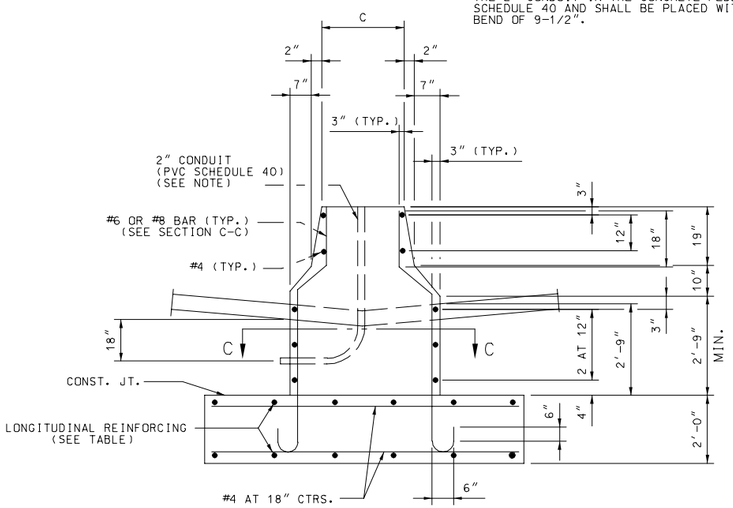

PART ELEVATION
(TYPE A CONCRETE TRAFFIC BARRIER)

NOTE:
THE 2" CONDUIT IN THE CONCRETE PEDESTAL SHALL BE PVC SCHEDULE 40 AND SHALL BE PLACED WITH A MIN. RADIUS BEND OF 9-1/2".

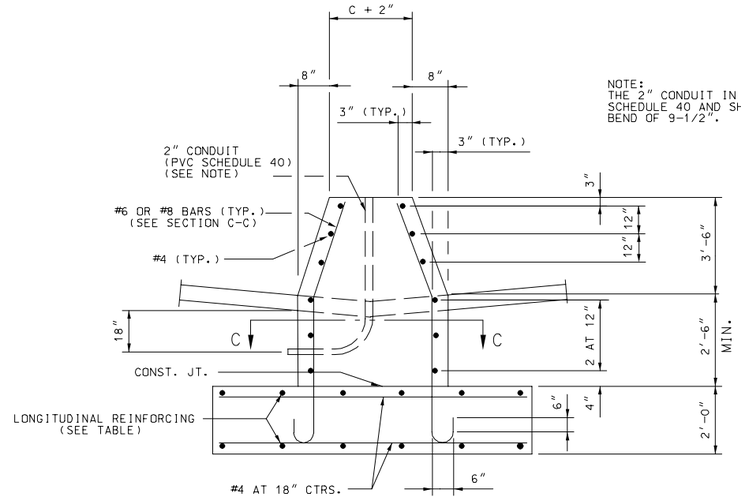

PART ELEVATION
(TYPE C CONCRETE TRAFFIC BARRIER)

POST TYPE	PIPE COLUMN	PEDESTAL SIZE ✳		FOOTING SIZE ✳	LONGITUDINAL FOOTING REINFORCEMENT		CON-CRETE CU.YDS
		c	d		TOP	BOTTOM	
I	12" STD. AT 65.42	2'-1"	2'-9"	7'-0" x 14'-6"	7 - #5 BARS	7 - #6 BARS	10.9
II	14" O.D. AT 72.09	2'-2"	6'-2"	8'-0" x 16'-0"	8 - #5 BARS	9 - #6 BARS	13.2
III	16" O.D. AT 82.77	2'-4"	6'-7"	8'-6" x 17'-6"	9 - #5 BARS	9 - #7 BARS	15.2
IV	18" O.D. AT 93.45	2'-6"	7'-1"	9'-6" x 19'-0"	10 - #5 BARS	10 - #8 BARS	18.1
V	20" O.D. AT 104.13	2'-11"	7'-8"	10'-0" x 20'-0"	10 - #5 BARS	10 - #8 BARS	20.6
VI	24" O.D. AT 125.49	3'-5"	8'-3"	10'-6" x 21'-0"	11 - #5 BARS	11 - #8 BARS	23.3
VII	24" O.D. AT 125.49	3'-5"	8'-6"	11'-0" x 22'-0"	11 - #5 BARS	11 - #9 BARS	25.1

✳ BASE PLATES, PEDESTAL, AND FOOTINGS LONGER SIDES SHALL BE NORMAL TO AXIS OF SIGN.

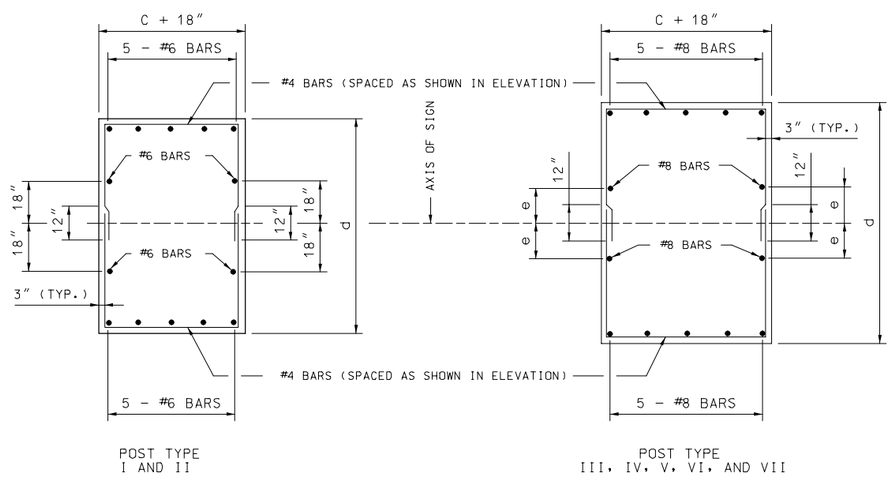

POST TYPE
I AND II

POST TYPE
III, IV, V, VI, AND VII

SECTION C-C
TYPICAL SECTION SHOWING
REINFORCING STEEL

DETAILS OF ALTERNATE PEDESTAL
(TO BE USED ADJACENT TO TYPE "A" MEDIAN BARRIER)

GENERAL NOTES:

A TAPERED TUBE OF EQUILVALENT SIZE AND THICKNESS MAY BE SUBSTITUTED FOR PIPE POST.

ALL STEEL PIPE COLUMNS SHALL BE EITHER GRADE "B" SEAMLESS STEEL PIPE OR GRADE "B" ELECTRIC RESISTANCE WELDED STEEL PIPE; A.S.T.M. SPECIFICATION A53. NO OBJECTIONABLE SEAMS WILL BE PERMITTED.

ALL STRUCTURES SHALL BE GROUNDED.

BURR THREADS ON ALL ANCHOR BOLTS.

PIPE COLUMN, BASE PLATE, ANCHOR BOLTS AND NOTES PERTAINING TO THESE ITEMS HAVE BEEN OMITTED FOR CLARITY. REFER TO SHEET NO. 4 OF 8 FOR DETAILS OF THESE ITEMS.

GROUND LUGS SHALL BE LOCATED INSIDE COLUMN NEAR HAND HOLE.

QUANTITIES FOR PEDESTAL, BASED ON NOMINAL HEIGHT OF 5'-2".

QUANTITIES FOR FOOTING, BASED ON NOMINAL DEPTH OF 2'-0".

QUANTITIES SHOWN ARE FOR ONE COLUMN ONLY.

MISSOURI HIGHWAYS AND TRANSPORTATION COMMISSION

OVERHEAD SIGN TRUSSES

ALUMINUM

DATE:_____ EFFECTIVE: 04-01-2005 **903.10Z** 5/6

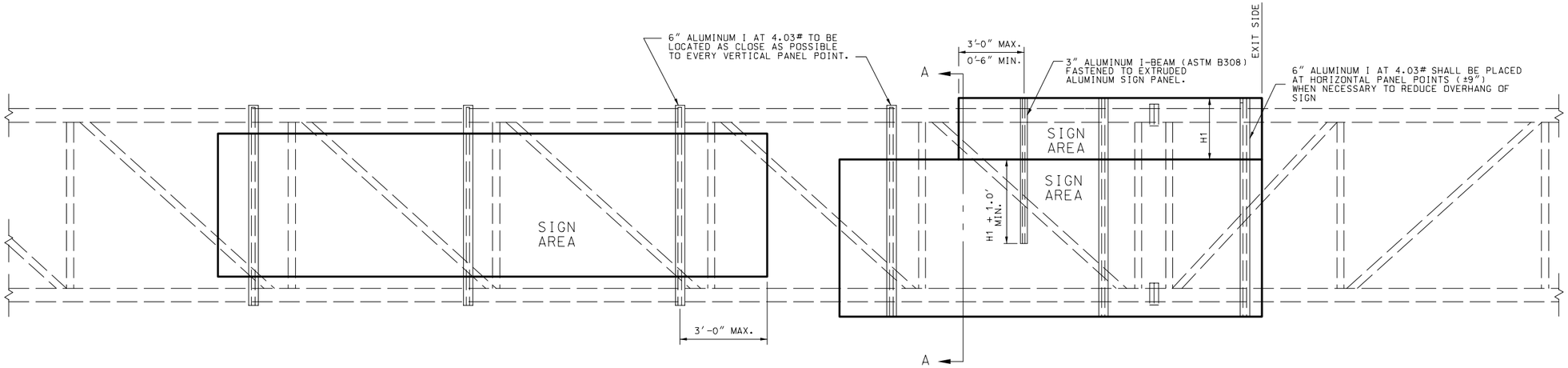

TYPICAL ELEVATION OF SIGN COMPONENTS

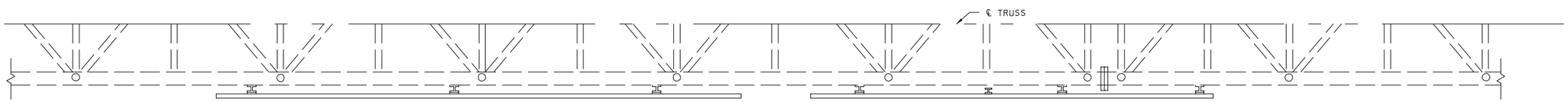

TYPICAL HALF PLAN OF SIGN COMPONENTS

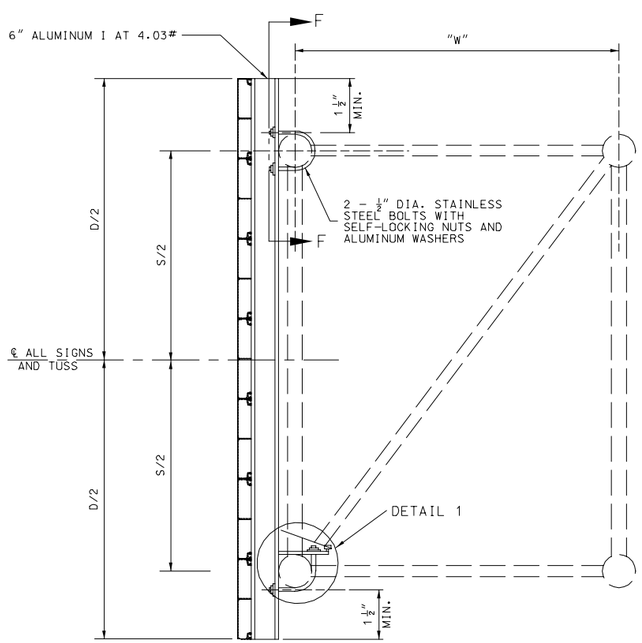

SECTION A-A
TYPICAL SECTION OF SIGN SUPPORT

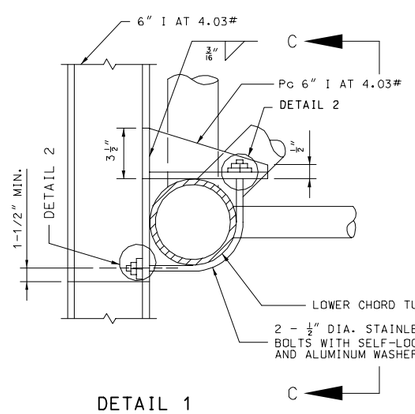

DETAIL 1

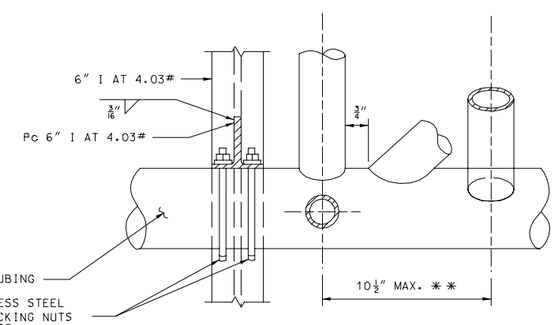

SECTION C-C

✱✱ LOCATE THE INTERIOR DIAGONAL AS CLOSE AS POSSIBLE TO THE CENTERLINE OF THE PANEL POINT WITHOUT OVER-LAPPING WELDS.

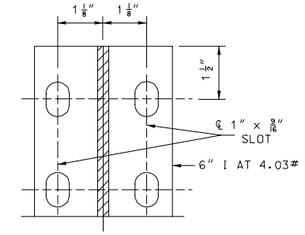

SECTION F-F

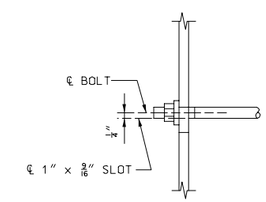

DETAIL 2

GENERAL NOTES:

EXIT NO. PANELS SHALL BE MOUNTED FLUSH WITH THE EXIT SIDE OF THE GUIDE SIGN.
ALL SIGNS SHALL BE CENTERED VERTICALLY ABOUT THE HORIZONTAL ℄ OF THE TRUSS.
SEE STD. PLAN 903.09 FOR LIGHTING DETAILS IF LIGHTING THE SIGN IS NECESSARY.
SEE STD. PLAN 903.03 FOR SIGN MOUNTING DETAILS.
ALL MATERIAL ALUMINUM EXCEPT AS NOTED.

MISSOURI HIGHWAYS AND TRANSPORTATION COMMISSION

OVERHEAD SIGN TRUSSES

ALUMINUM

DATE:_____ | EFFECTIVE: 04-01-2005 | **903.10Z** | 6/6