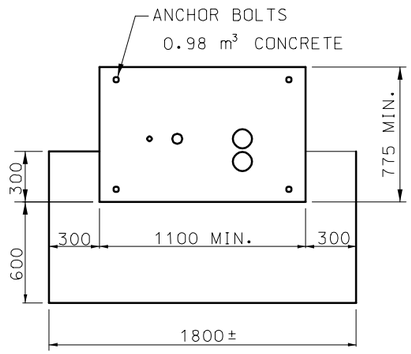

PLAN VIEW

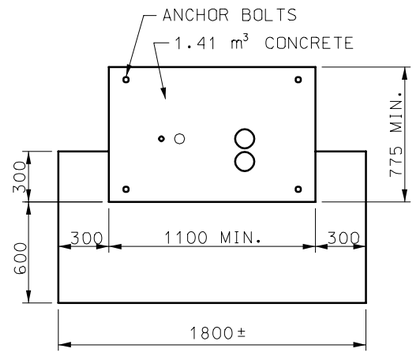

PLAN VIEW

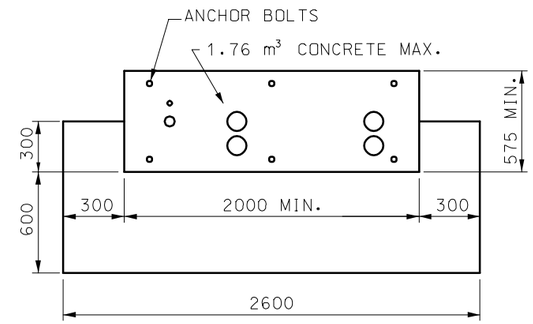

PLAN VIEW

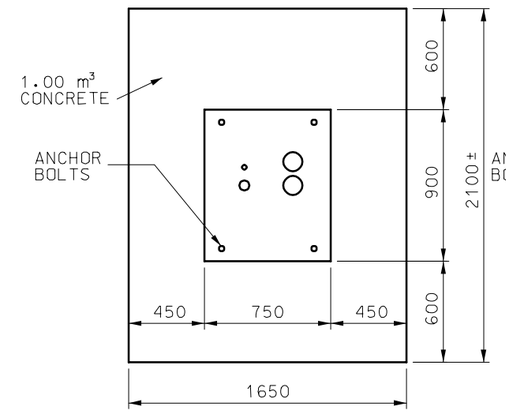

PLAN VIEW

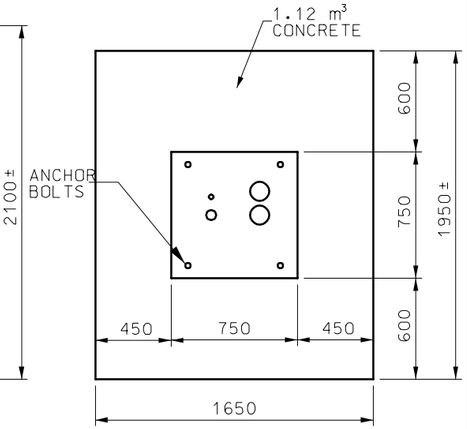

PLAN VIEW

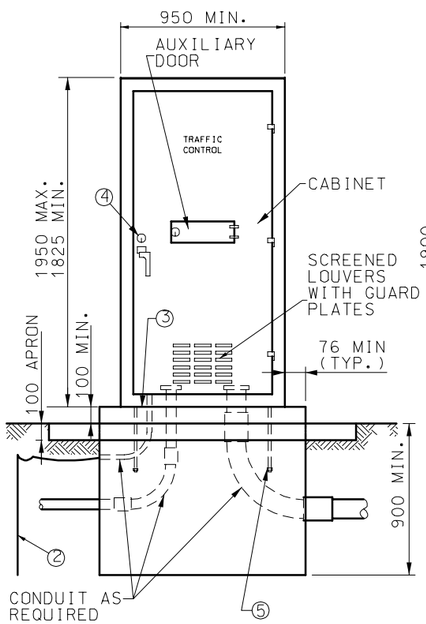

FOR CONTROLLER CABINETS WITH HEIGHTS FROM 1825 TO 1750.

TYPE E

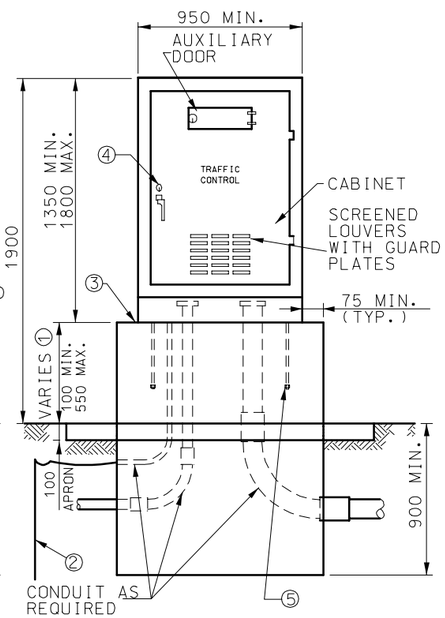

FOR CONTROLLER CABINETS WITH HEIGHTS FROM 1300 TO 1800.

TYPE EV

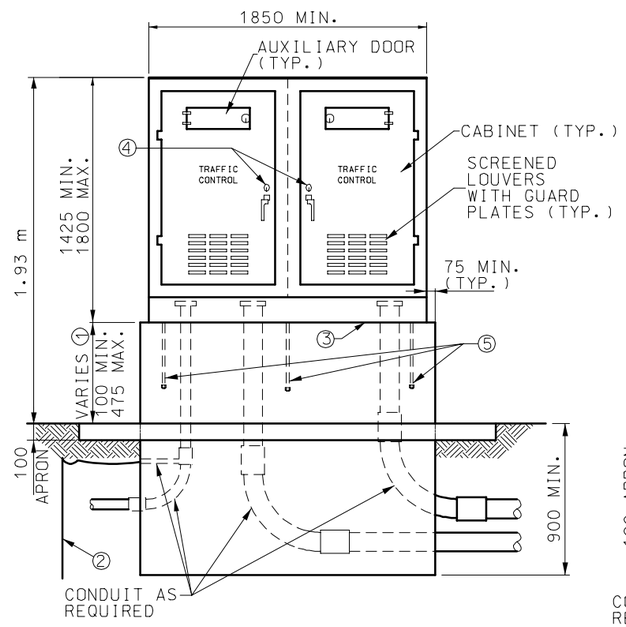

HEIGHTS FROM 900 TO 1275.

DOUBLE

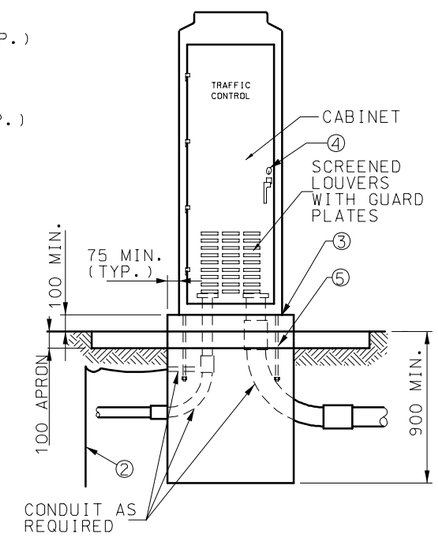

FOR TYPE 170
CONTROLLER CABINETS
TYPE 332

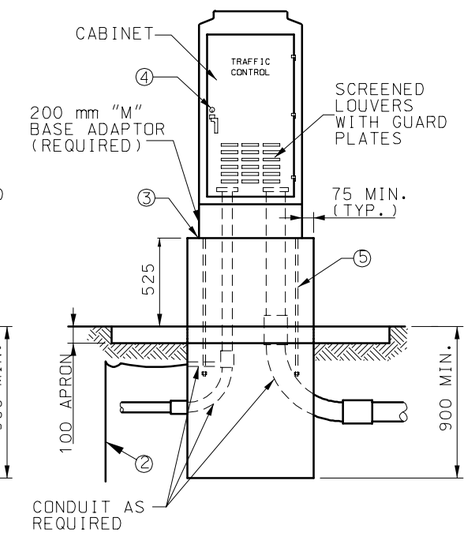

FOR TYPE 170
CONTROLLER CABINETS
TYPE 336S

CONTROLLER CABINETS AND BASE TYPES

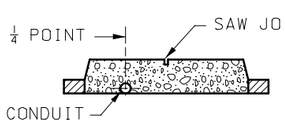

IN PROPOSED
CONCRETE MEDIAN
ON EXISTING PAVEMENT

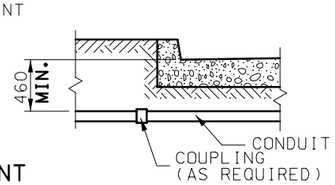

0.5% MINIMUM SLOPE

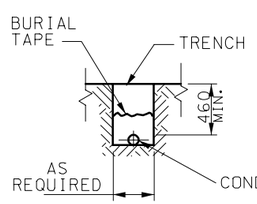

NON-PAVED
SURFACED

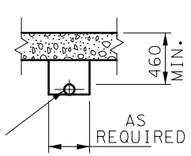

PAVED SURFACE

CONDUIT LOCATIONS

NOTES:

1. DIMENSION VARIES ACCORDING TO CABINET HEIGHT.
2. GROUND ROD, 19 mm DIA. x 2.4 m MIN. IF SUBSURFACE CONDITIONS EXIST WHICH PROHIBIT THE PLACEMENT OF THE GROUND ROD IN A VERTICAL POSITION, THE ROD MAY BE DRIVEN AT AN OBLIQUE ANGLE NOT TO EXCEED 45 DEGREES FROM VERTICAL OR BURIED IN A TRENCH AT LEAST 750 mm DEEP. CONNECTION TO GROUND ROD SHALL BE CADWELDED.
3. LIFETIME SILICONE CAULK BETWEEN CABINET AND BASE.
4. #2 CORBIN LOCK
5. ANCHOR BOLTS (USE BOLT HEAD OR TACK WELDED NUT ON EMBEDDED END AND SIZE AS SPECIFIED BY CABINET MANUFACTURER).

GENERAL NOTES:

ALL DIMENSIONS SHOWN ARE IN mm UNLESS OTHERWISE NOTED.

MISSOURI HIGHWAYS AND TRANSPORTATION COMMISSION

TRAFFIC SIGNALS
CONTROLLERS
CONDUIT LOCATION

DATE:_____ EFFECTIVE: 04-01-2005 **M902.10Q** 1/1