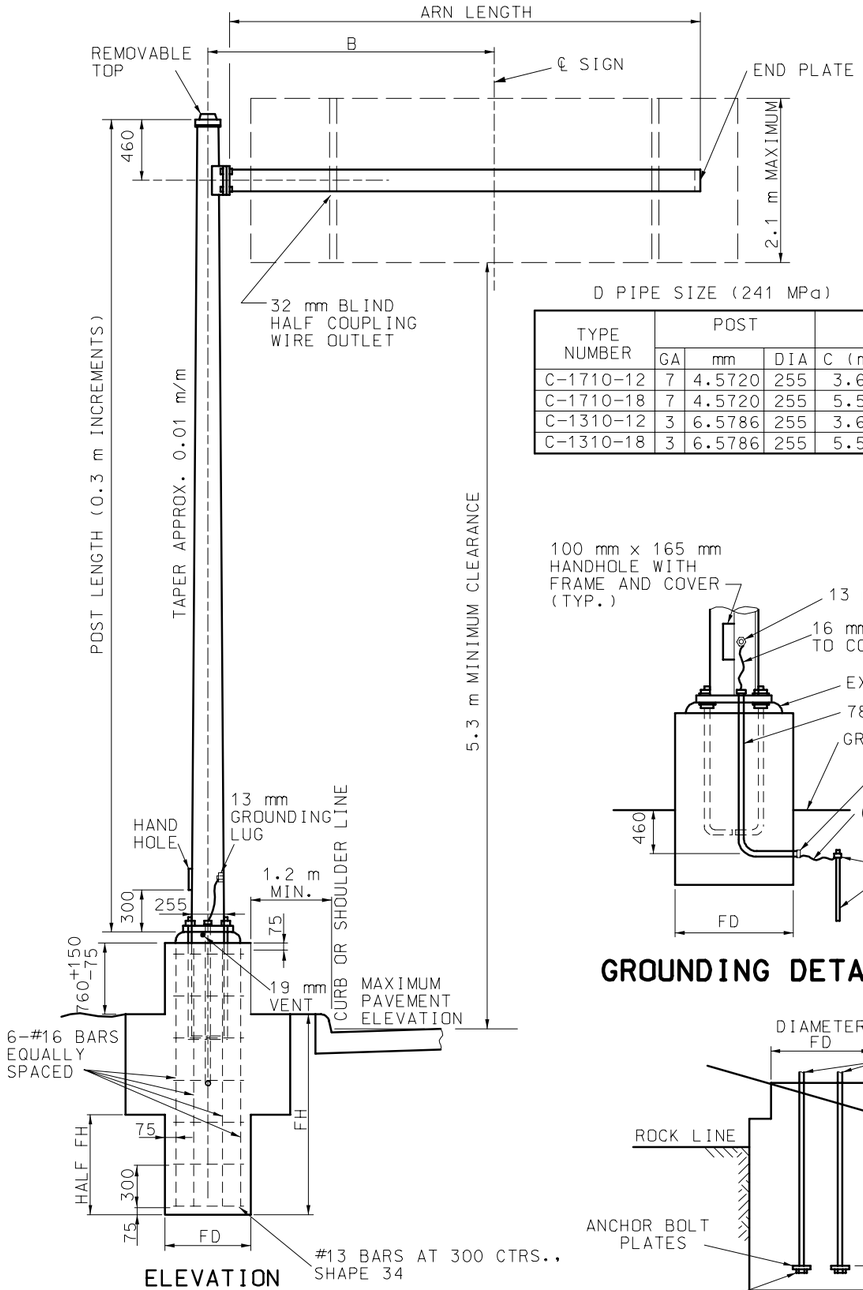

SINGLE ARM CANTILEVER

D PIPE SIZE (241 MPa)

TYPE NUMBER	POST			ARM DIMENSIONS		MAX SIGN AREA	MAX. B WITH MAX. SIGN AREA
	GA	mm	DIA	C (m)	PIPE D (mm)	m^2	
C-1710-12	7	4.5720	255	3.6	152 STD	3.8	2.4
C-1710-18	7	4.5720	255	5.5	7.1 THK	3.8	2.4
C-1310-12	3	6.5786	255	3.6	152 EX HVY	5.5	2.6
C-1310-18	3	6.5786	255	5.5	11.0 THK	5.5	2.6

NOTE:
DIMENSION B MAY BE EXCEEDED PROVIDED THE PRODUCT OF ACTUAL SIGN AREA TIMES THE DISTANCE FROM CENTERLINE OF POST TO CENTERLINE OF SIGN DOES NOT EXCEED MAXIMUM SIGN AREA TIMES B. WIND LOAD EQUALS 195 kg/m^2. DESIGN FOR 2.1 m SIGN HEIGHT.

ESTIMATED QUANTITIES

TYPE NUMBER	DIAMETER mm		m^3 CLASS B CONCRETE FOOTING				REINFORCING STEEL				
			FD SECTION		FB SECTION		#16		#13 ✳		TOTAL kg
	FD	FB	300 mm DEPTH	25 mm DEPTH	300 mm DEPTH	25 mm DEPTH	NO.	mm	NO.	mm	
C-1710	610	1220	0.088	0.077	0.199	0.017	6	2285	9	1710	36
C-1310	610	1220	0.088	0.077	0.199	0.017	6	2285	9	1710	36

✳ ESTIMATED QUANTITY FOR REINFORCING STEEL IS BASED ON A 1:2 (V:H) SLOPE.

MODIFIED FOOTING IN SOLID ROCK

TYPE NUMBER	ANCHOR BOLT DIA. mm	ANCHOR BOLT PLATE mm	FOOTING mm			CLASS B CONCRETE FOOTING FB SECTION m^3	
			RH	FD	FB	300 mm DEPTH	25 mm DEPTH
C-1710 & C-1310	38	90 x 90 x 20	760	610	915	0.143	0.012
C-2315	50	90 x 90 x 20	915	915	1065	0.238	0.020
C-2318	50	90 x 90 x 20	1065	1065	1065	0.267	0.022
C-2018	57	115 x 115 x 20	1065	1065	1065	0.267	0.022

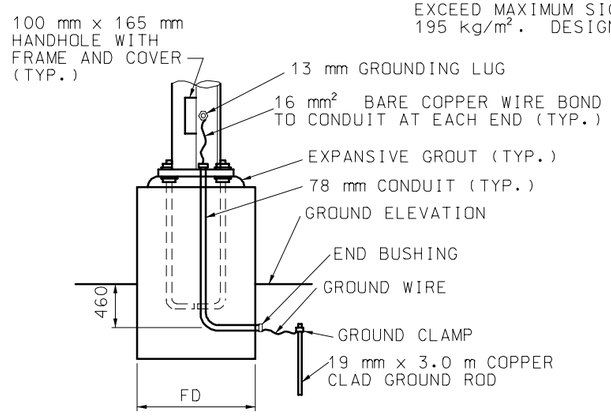

GROUNDING DETAIL

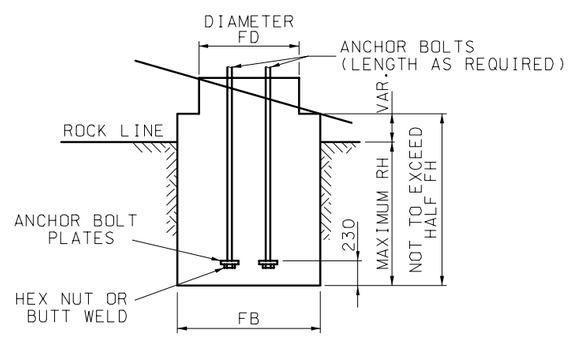

NOTE:
REINFORCEMENT PLACED SAME AS STANDARD FOOTING. CONCRETE TO BE POURED TO EXCAVATED FACE OF ROCK.

MODIFIED FOOTING IN SOLID ROCK

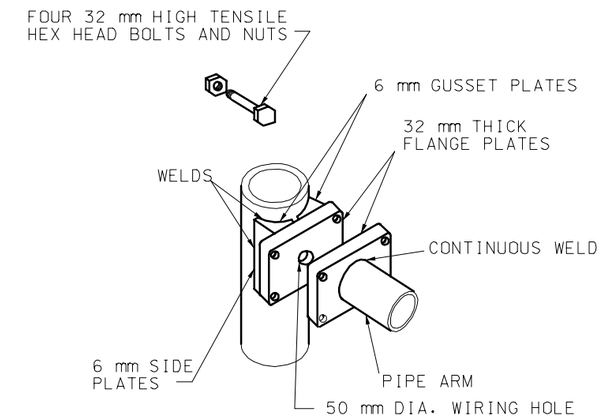

FOR POLE DIAMETER UNDER 300 mm

ARM ATTACHMENT

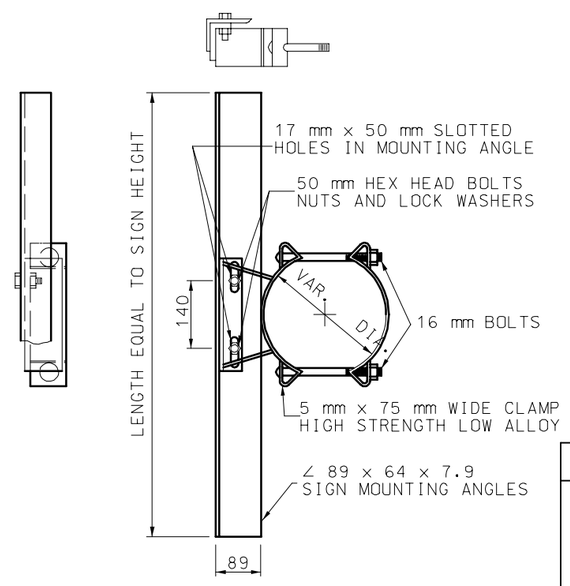

GALVANIZED SIGN BRACKET ASSEMBLY

GENERAL NOTES:

ALL DIMENSIONS SHOWN ARE IN mm UNLESS OTHERWISE NOTED.

ALL SIGNS CENTERED VERTICALLY.

MISSOURI HIGHWAYS AND TRANSPORTATION COMMISSION

HIGHWAY SIGNING
TUBULAR SUPPORT STEEL
- TYPE C

DATE:_____ EFFECTIVE: 04-01-2005 **M903.07H** 1/2

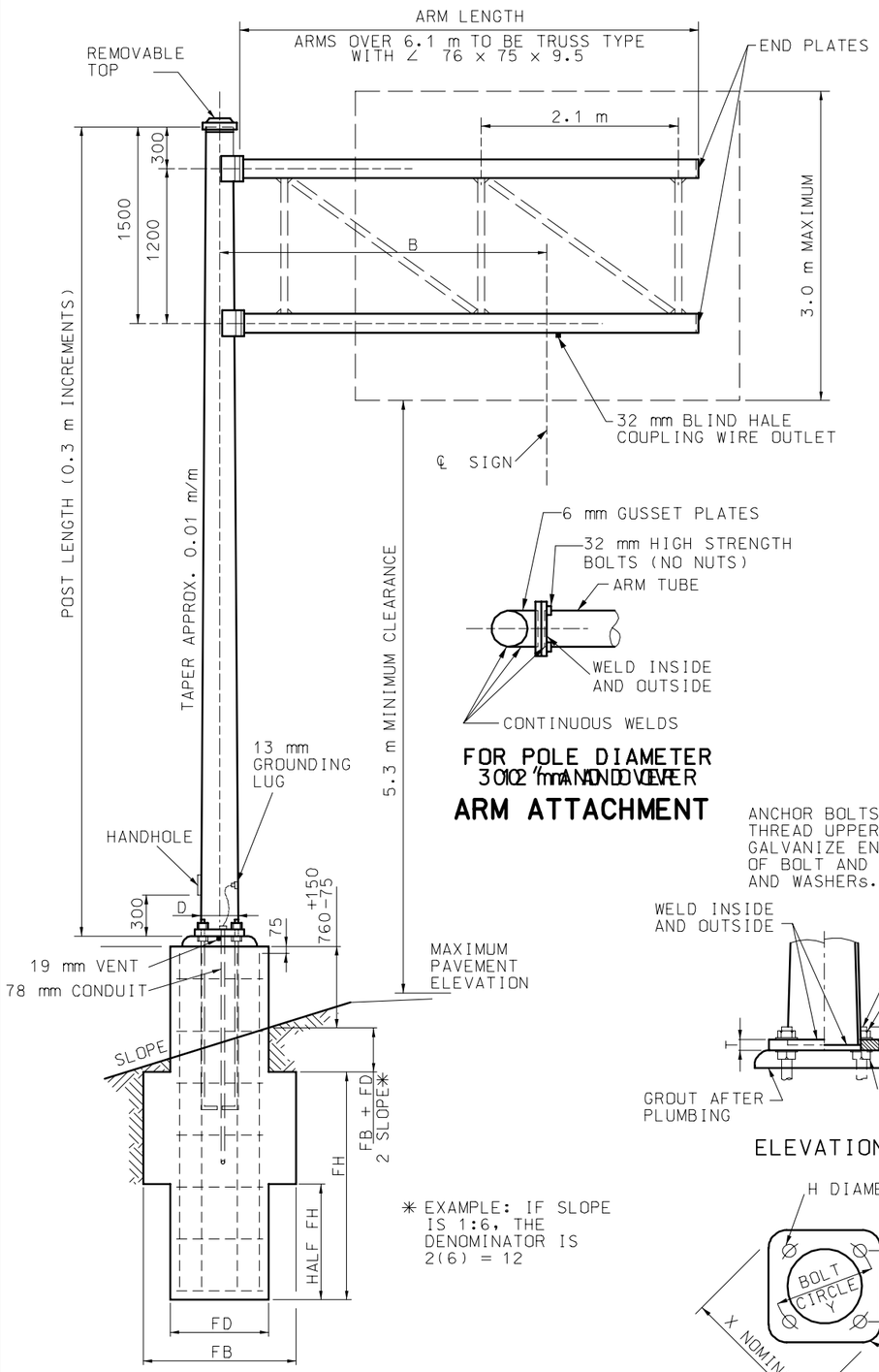

ELEVATION

DOUBLE ARM CANTILEVER

✳ EXAMPLE: IF SLOPE IS 1:6, THE DENOMINATOR IS 2(6) = 12

FOR POLE DIAMETER 301Q2 mm AND DOWNWARD

ARM ATTACHMENT

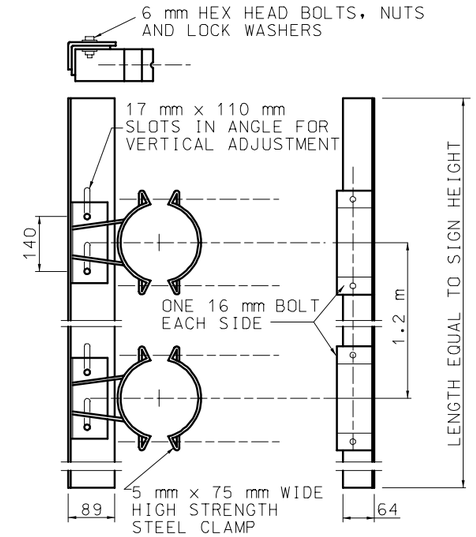

MINIMUM OF TWO BRACKETS REQUIRED ON SIGNS OVER 1050 mm IN LENGTH

GALVANIZED SIGN BRACKET ASSEMBLY

NOTE:
DIMENSION B MAY BE EXCEEDED PROVIDED THE PRODUCT OF ACTUAL SIGN AREA TIMES THE DISTANCE FROM CENTERLINE OF POST TO CENTERLINE OF SIGN DOES NOT EXCEED MAXIMUM SIGN AREA TIMES B.

ESTIMATED QUANTITIES											
TYPE NUMBER	DIAMETER mm		m^2 CLASS B CONCRETE FOOTING				REINFORCING STEEL				
			FD SECTION		FB SECTION		#16		#13 ✳		TOTAL
	FD	FB	300 mm DEPTH	25 mm DEPTH	300 mm DEPTH	25 mm DEPTH	NO.	mm	NO.	mm	kg
C-2315	1220	915	0.197	0.016	0.351	0.029	6	3430	13	2670	67
C-2318	1525	1065	0.267	0.022	0.548	0.046	6	3690	13	3140	75
C-2018	1525	1065	0.267	0.022	0.548	0.046	6	3845	14	3140	80

✳ ESTIMATED QUANTITY FOR REINFORCING STEEL IS BASED ON A 1:2 (V:H) SLOPE.

TYPE NUMBER	POST			ARM			B	MAX. AREA
	GA	mm	DIA.	GA	mm	DIMENSIONS	m	m^2
C-2315-12	3	6.5786	380	7	4.572	190 x 150 x 3.6 m	2.4	12
C-2315-16	3	6.5786	380	7	4.572	230 x 170 x 4.9 m	3.6	11
C-2315-20	3	6.5786	380	3	6.5786	255 x 185 x 6.1 m	4.9	11
C-2315-24	3	6.5786	380	3	6.5786	280 x 195 x 7.3 m	6.1	9
C-2318-18	3	6.5786	495	7	4.572	230 x 165 x 5.5 m	3.0	13
C-2318-22	3	6.5786	495	7	4.572	280 x 200 x 6.7 m	4.3	14
C-2318-26	3	6.5786	495	7	4.572	320 x 225 x 7.9 m	5.5	14
C-2018-24	0	8.636	495	7	4.572	320 x 230 x 7.3 m	4.3	19
C-2018-28	0	8.636	495	3	6.5786	320 x 220 x 8.5 m	5.5	20
C-2018-34	0	8.636	495	0	8.636	330 x 210 x 10.4 m	7.3	18

SIGN HT. (mm)	MAX METERS OF SIGN WIDTH PER BRACKET	
	1 CLAMP TYPE	2 CLAMP TYPE
1050	4.9	4.9
1200	4.0	4.9
1500	2.4	4.9
1800	1.5	4.6
2100	0.9	3.4
2400	0.9	1.8
2700	0.9	1.2
3000	0.9	0.9

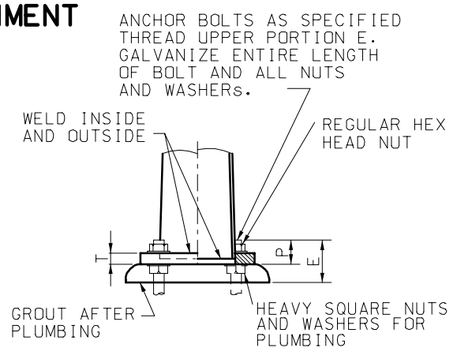

ELEVATION

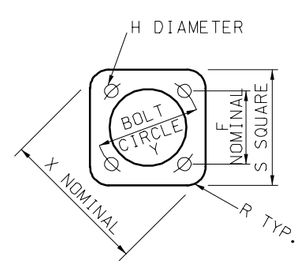

PLAN

POST BASE DETAIL

POST BASE DIMENSIONS (mm)													
TYPE NUMBER	Y	X	E	F	H	P	R	S	T	ANCHOR BOLTS	FOOTING		
											FH	FD	FB
C-1710 & C-1310	345	445	180	245	45	95	80	360	40	38 x 1525	1525	610	1220
C-2315	560	730	215	395	60	120	115	585	50	50 x 2440	2135	915	1220
C-2318	650	840	215	460	60	120	140	675	50	50 x 2440	2285	1065	1525
C-2018	650	840	240	460	65	140	140	675	65	57 x 2440	2440	1065	1525

GENERAL NOTES:

ALL DIMENSIONS SHOWN ARE IN mm UNLESS OTHERWISE NOTED.

MISSOURI HIGHWAYS AND TRANSPORTATION COMMISSION

HIGHWAY SIGNING
TUBULAR SUPPORT STEEL
– TYPE C

DATE:_____ EFFECTIVE: 04-01-2005 **M903.07H** 2/2