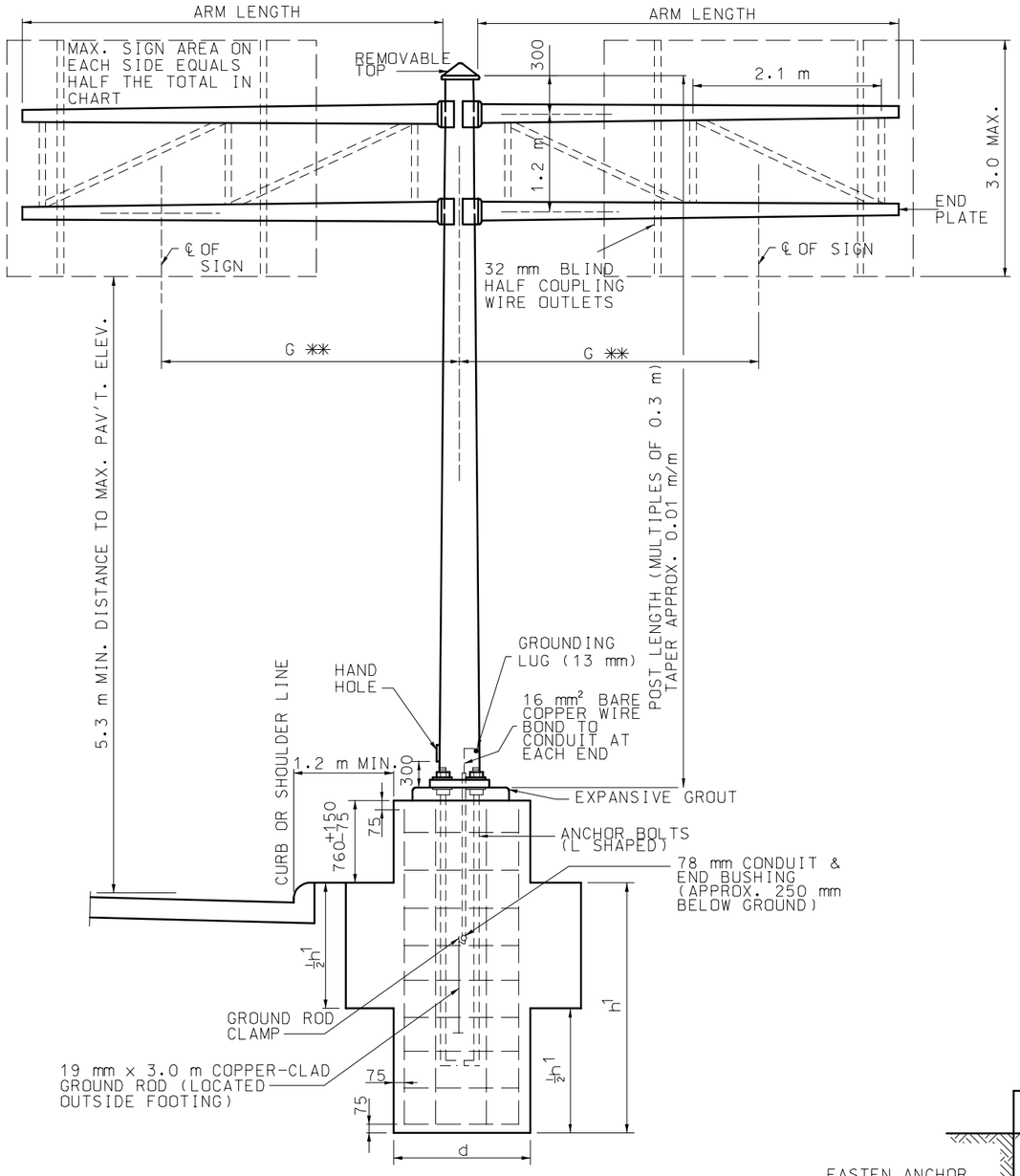

PLAN FOOTING

TYPE NUMBER	POST			ARM		MAX. AREA m²
	GA.	"G" m	DIA.	GA.	DIMENSIONS	
B-2018	0	2.4	460	7	190 x 148 x 3.7 m	24.2
	0	3.6	460	7	230 x 172 x 4.9 m	22.3
	0	4.8	460	3	255 x 183 x 6.1 m	21.4
	0	6.0	460	3	280 x 194 x 7.3 m ✱	18.6
B-23318	3+3	3.0	460	7	230 x 165 x 5.5 m	26.9
	3+3	4.2	460	7	280 x 201 x 6.7 m ✱	27.9
	3+3	5.4	460	7	320 x 225 x 7.9 m ✱	27.9
B-20018	0+0	4.2	460	7	320 x 232 x 7.3 m ✱	38.1
	0+0	5.4	460	3	320 x 218 x 8.5 m ✱	39.9
	0+0	7.2	460	0	330 x 209 x 10.4 m ✱	39.9

NOTES: ✱ ARMS OVER 6.1 m TO BE TRUSS TYPE WITH ∠ 76 x 76 x 9.5.
✱✱"G" MAY BE EXCEEDED PROVIDED THE PRODUCT OF ACTUAL SIGN AREA TIMES THE DISTANCE FROM CENTERLINE OF SHAFT TO CENTERLINE OF SIGN DOES NOT EXCEED HALF THE TOTAL AREA IN CHART TIMES "G".
W = 1.9 kN/m².

ESTIMATED QUANTITIES											
TYPE NUMBER	DIA. "d" (mm)	DIA. "b" (mm)	CLASS B CONCRETE FOOTING (m³)				REINFORCING STEEL				
			"d" SECTION		"b" SECTION		#16		#13 ✱		TOTAL kg
			250 mm DEPTH	25 mm DEPTH	250 mm DEPTH	25 mm DEPTH	NO.	mm	NO.	mm	
B-2018	1070	1830	0.225	0.022	0.428	0.043	6	3045	11	3155	62
B-23318	1070	2135	0.225	0.022	0.510	0.051	6	3200	12	3155	68
B-20018	1070	2135	0.225	0.022	0.510	0.051	6	3655	13	3155	75

✱ ESTIMATED QUANTITY FOR REINFORCING STEEL IS BASED ON A 1:2 (V:H) SLOPE.

MODIFIED FOOTING IN SOLID ROCK						CLASS B CONCRETE FOOTING m³	
TYPE NUMBER	ANCHOR BOLT ✱ (mm)	ANCHOR BOLT PLATE (mm)	FOOTING			"b" SECTION	
			"h²" (mm)	"d" (mm)	"b" (mm)	250 mm DEPTH	25 mm DEPTH
B-2018	57	115 x 115 x 20	1070	1070	1070	0.225	0.022
B-23318	75	140 x 140 x 25	1220	1070	1370	0.305	0.031
B-20018	75	140 x 140 x 25	1525	1070	1370	0.305	0.031

✱ ANCHOR BOLT LENGTH AS REQUIRED

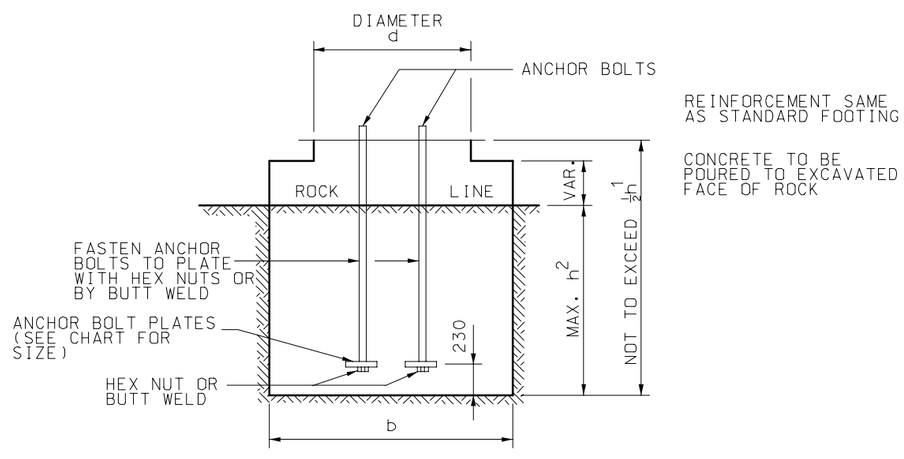

MODIFIED FOOTINGS IN SOLID ROCK

GENERAL NOTES:

ALL DIMENSIONS SHOWN ARE IN mm UNLESS OTHERWISE NOTED.

ALL SIGNS CENTERED VERTICALLY.

MISSOURI HIGHWAYS AND TRANSPORTATION COMMISSION

HIGHWAY SIGNING
TUBULAR SUPPORT STEEL - TYPE B

DATE:_____ EFFECTIVE: 04-01-2005 **M903.08G** 1/2

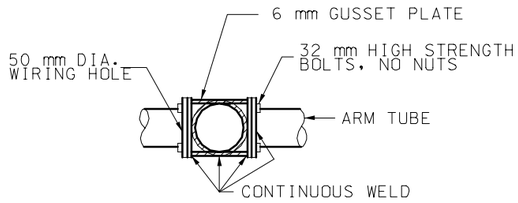

ARM ATTACHMENT DETAIL

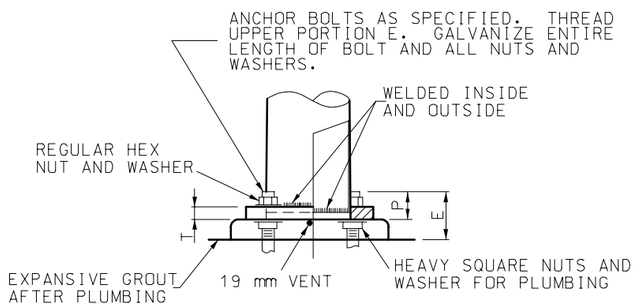

ELEVATION BASE DETAIL

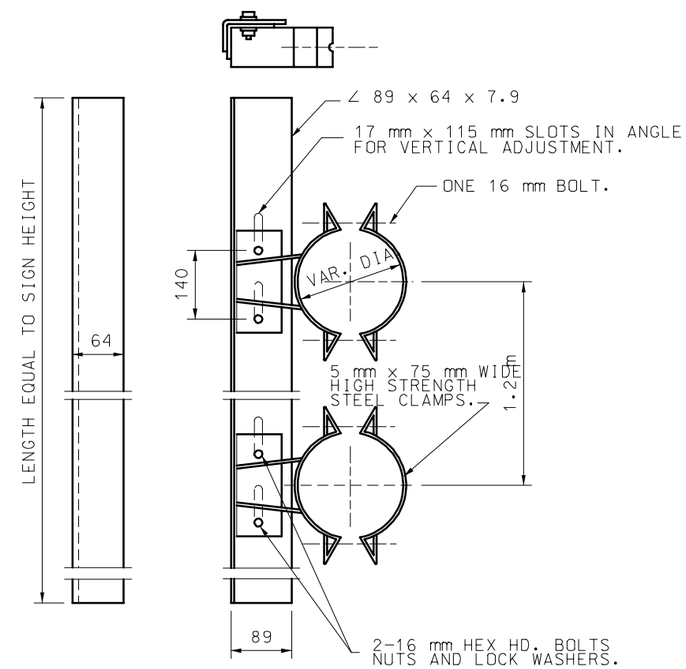

GALVANIZED SIGN BRACKET ASSEMBLY ✳

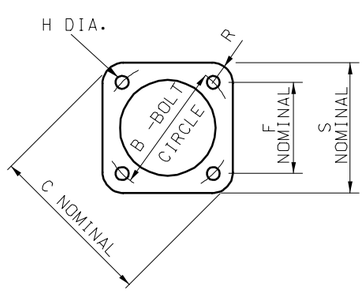

PLAN POST BASE DETAIL

SIGN HEIGHT mm	MAX. m OF SIGN WIDTH PER BRACKET
≤ 1200	4.8
1500	4.8
1800	4.5
2100	3.3
2400	1.8
2700	1.2
3000	0.9

✳ MINIMUM OF TWO BRACKETS REQUIRED ON SIGNS OVER 1050 mm IN LENGTH

POST BASE DIMENSIONS (mm)													
TYPE NUMBER	B	C	F	H	S	R	P	T	E	ANCHOR BOLTS	FOOTING "h"	FOOTING "d"	FOOTING "b"
B-2018	650	840	460	67	675	140	140	64	240	57 x 2440	2285	1070	1830
B-23318	650	840	460	85	675	140	180	75	305	75 x 3050	2440	1070	2135
B-20018	650	840	460	85	675	140	180	75	305	75 x 3050	2895	1070	2135

GENERAL NOTES:

ALL DIMENSIONS SHOWN ARE IN mm UNLESS OTHERWISE NOTED.

MISSOURI HIGHWAYS AND TRANSPORTATION COMMISSION

HIGHWAY SIGNING
TUBULAR SUPPORT STEEL
– TYPE B

DATE:_____ EFFECTIVE: 04-01-2005 **M903.08G** 2/2