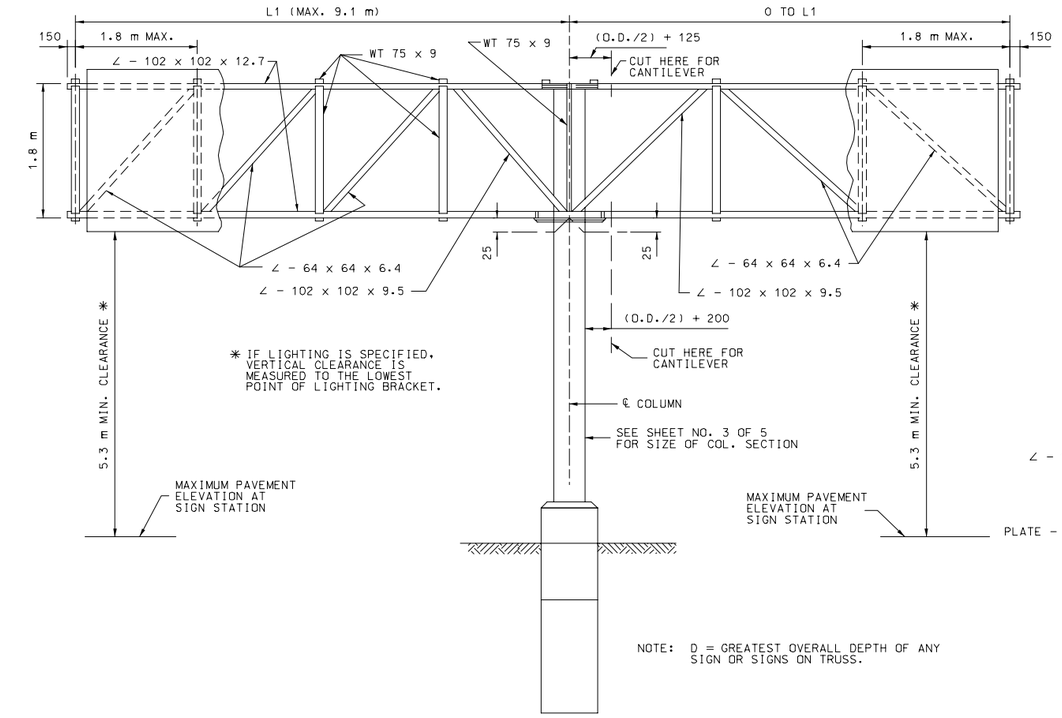

ELEVATION

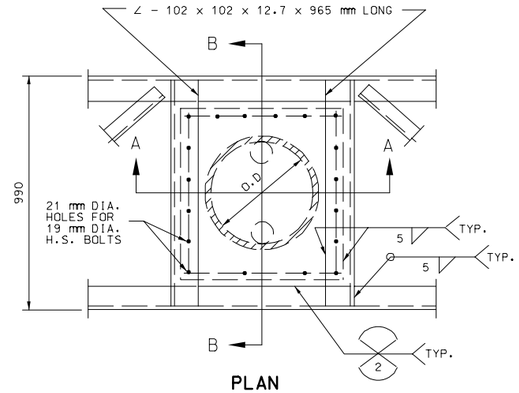

PLAN

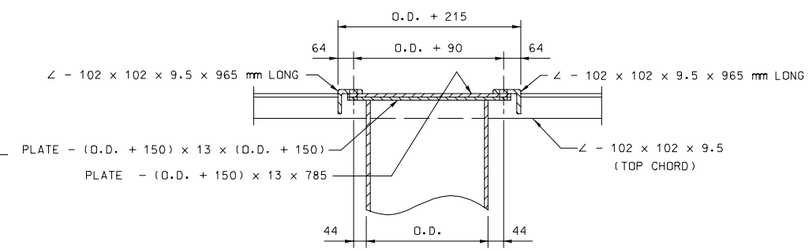

SECTION A-A

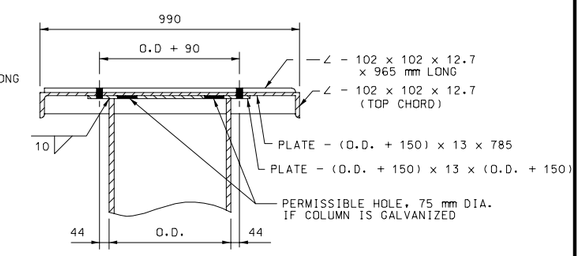

SECTION B-B

DETAILS OF TRUSS TOP CONNECTION TO COLUMN

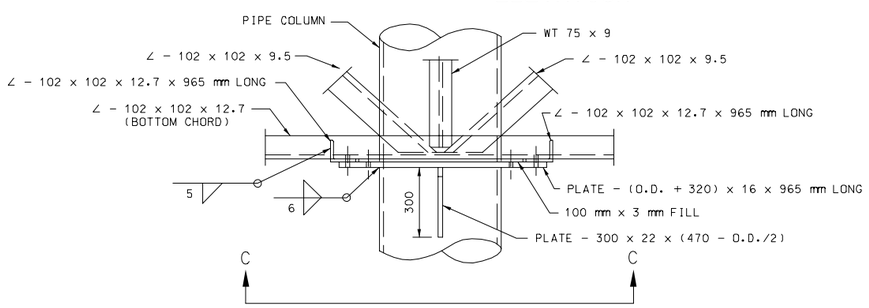

SIDE ELEVATION

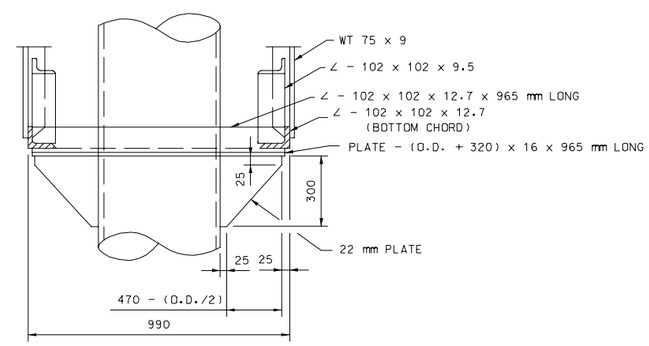

END ELEVATION

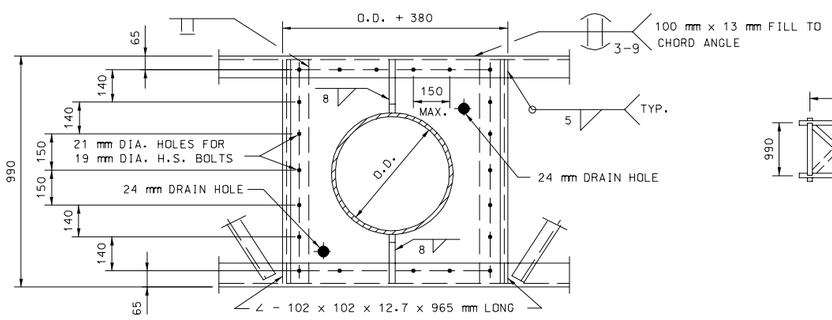

VIEW C-C

DETAILS OF TRUSS BOTTOM CONNECTION TO COLUMN

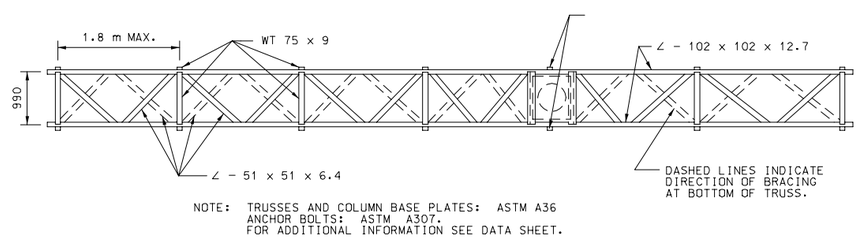

NOTE: TRUSSES AND COLUMN BASE PLATES: ASTM A36
ANCHOR BOLTS: ASTM A307.
FOR ADDITIONAL INFORMATION SEE DATA SHEET.

PLAN

DETAILS OF BUTTERFLY AND CANTILEVER TRUSS

GENERAL NOTES:

ALL DIMENSIONS SHOWN ARE IN mm UNLESS OTHERWISE NOTED.

ALL FASTENERS SHALL HAVE A HARDENED WASHER UNDER THE NUT OR BOLT HEAD, WHICHEVER IS TURNED IN TIGHTENING.

ZINC CHROMATE PRIMER SHALL MEET THE REQUIREMENTS OF FEDERAL SPECIFICATION TT-P-645 OR TT-P-1757 AND SHALL BE ACCEPTED ON THE BASIS OF THE LABEL SHOWING CONFORMANCE OR A MANUFACTURER'S CERTIFICATION.

DESIGN OF STRUCTURAL SUPPORTS SHALL COMPLY WITH AASHTO STANDARD SPECIFICATIONS FOR STRUCTURAL SUPPORTS FOR HIGHWAY SIGNS, LUMINAIRES AND TRAFFIC SIGNALS 2001 AND CURRENT INTERIMS.

MISSOURI HIGHWAYS AND TRANSPORTATION COMMISSION

OVERHEAD SIGN TRUSSES

BUTTERFLY & CANTILEVER STRUCTURAL STEEL

DATE:_____ | EFFECTIVE: 04-01-2005 | **M903.12U** | 1/5

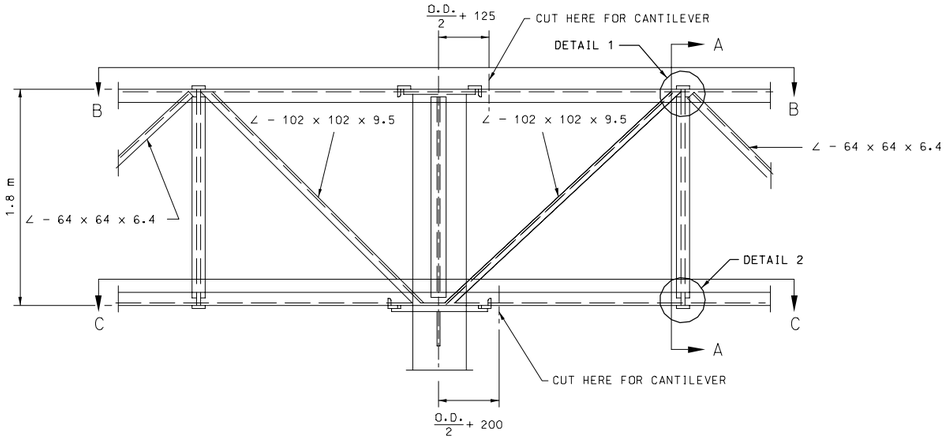

PART ELEVATION OF BUTTERFLY TRUSS

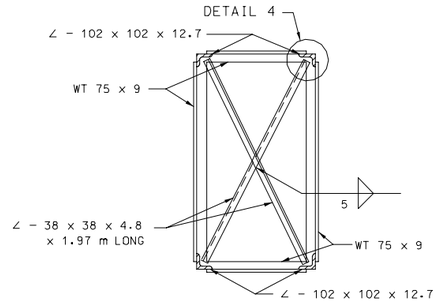

SECTION A-A

NOTE: SHRINK ∠ - 38 X 38 X 4.8 IF NECESSARY TO TAKE UP DISTORTIONAL SLACK.

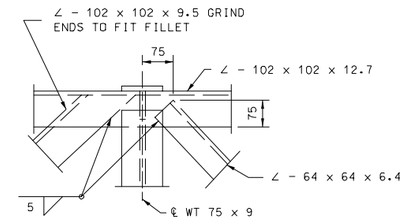

DETAIL 1

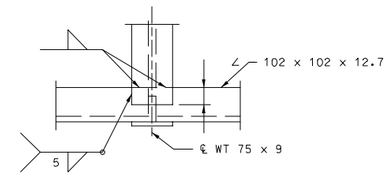

DETAIL 2

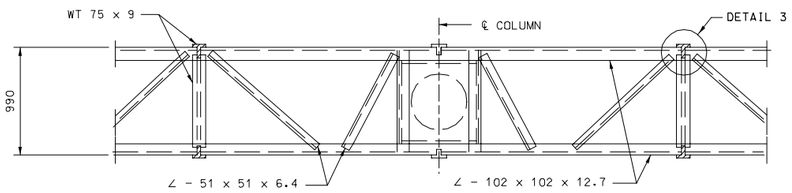

SECTION B-B

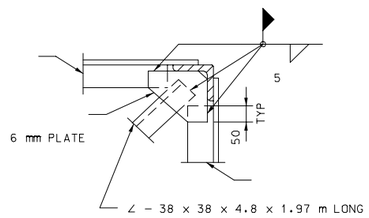

SECTION E-E
(SPLICE ONLY)

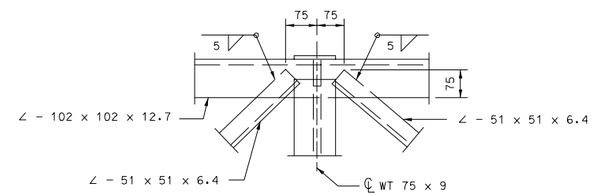

DETAIL 3

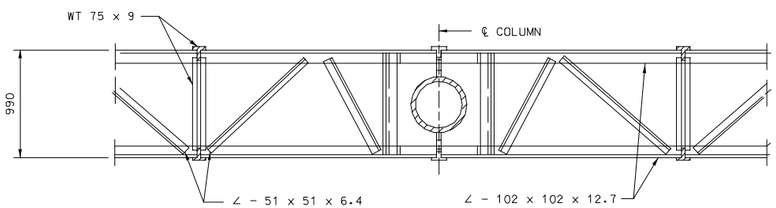

SECTION C-C

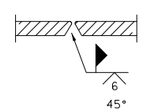

SECTION D-D

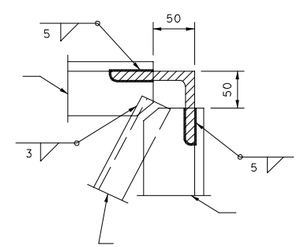

DETAIL 4

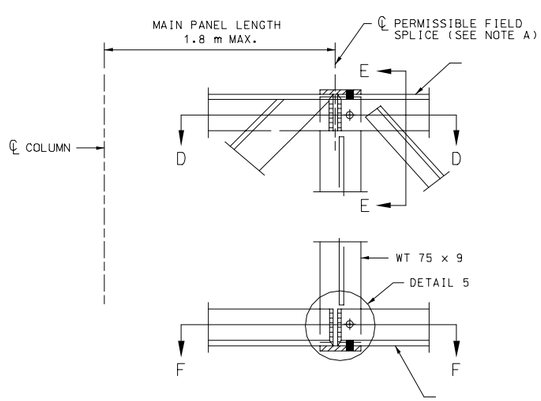

LOCATION OF FIELD SPLICE

NOTE "A": SPLICING CHORD ANGLES IN THE SHOP AND THE FIELD SPLICE SHOWN IN THIS SHEET WILL NOT BE ALLOWED WITHOUT SPECIAL PERMISSION. IF PERMISSION IS GRANTED SUCH SPLICES SHALL BE LOCATED AT THE CENTER LINE OF MAIN PANEL POINT NEXT TO COLUMN.

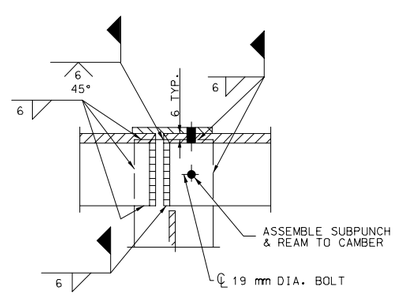

SECTION F-F

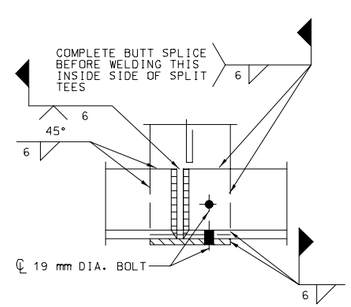

DETAIL 5

NOTE: 19 mm DIA. BOLTS SHALL BE REMOVED AFTER WELDING IS COMPLETE. BOLT HOLES SHALL BE PLUGGED AND THE OUTSIDE FACE GROUND SMOOTH.

GENERAL NOTES:

ALL DIMENSIONS SHOWN ARE IN mm UNLESS OTHERWISE NOTED.

MISSOURI HIGHWAYS AND TRANSPORTATION COMMISSION

OVERHEAD SIGN TRUSSES
BUTTERFLY & CANTILEVER STRUCTURAL STEEL

DATE:_____ | EFFECTIVE: 04-01-2005 | M903.12U | 2/5

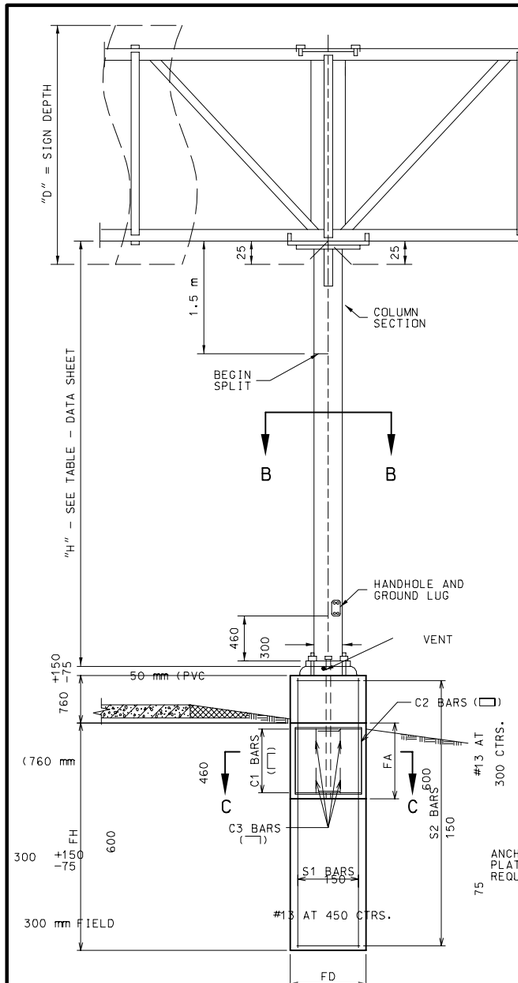

NOTE: THE 50 mm CONDUIT IN THE CONCRETE PEDESTAL SHALL BE PLACED WITH LARGE RADIUS BENDS SO THAT THE WIRES WILL BE PULLED.

ELEVATION

WHEN ROCK IS ENCOUNTERED AT A DEPTH NOT EXCEEDING "FH"/2 FOR FD > 3' OR "FH"/4 FOR FD ≤ 3', THE DIMENSION "FH" MAY BE ADJUSTED TO A MINIMUM OF 3 × "FD", SUBJECT TO APPROVAL BY THE ENGINEER.

CONTACT THE ENGINEER IF WATER TABLE IS ENCOUNTERED DURING EXCAVATION.

VERTICAL LEG OF C3 BARS SHALL BE PLACED INSIDE SHAFT S2 BARS.

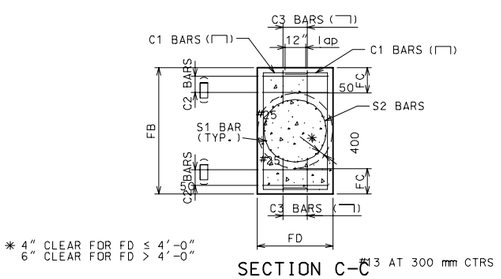

* 4" CLEAR FOR FD ≤ 4'-0"
6" CLEAR FOR FD > 4'-0"

SECTION C-C

(TYPICAL SECTION SHOWING REINFORCING STEEL)

NOTE: FOR DETAILS OF ALTERNATE PEDESTAL, SEE SHEET NO. 4 OF 5.

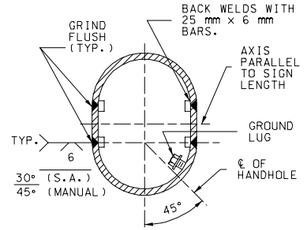

SECTION B-B
(FOR SPLIT COLUMNS ONLY)

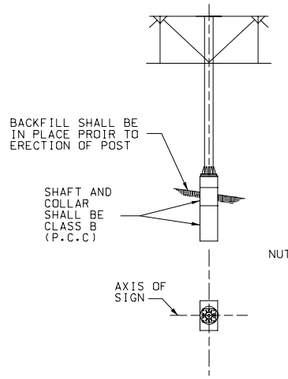

DETAIL SHOWING AXIS OF SIGN

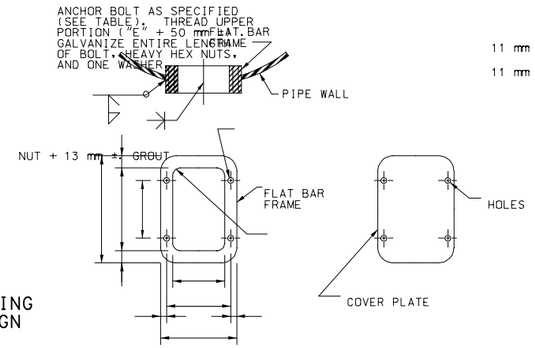

NOTE: HANDHOLE REQUIRED ONLY IN POWER COLUMN.

HANDHOLE AND COVER DETAILS

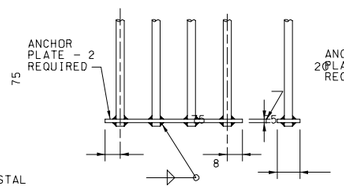

(SHOWN FOR 4 BOLTS - SIMILAR FOR 3 BOLTS)

ANCHORAGE DETAIL A

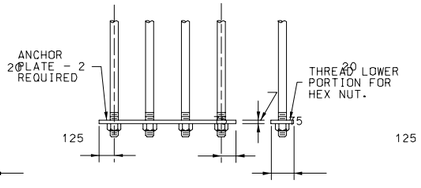

(SHOWN FOR 4 BOLTS - SIMILAR FOR 3 BOLTS)

ANCHORAGE DETAIL B
(OPTIONAL)

POST TYPE	PIPE COLUMN DIA (mm)	PIPE COLUMN kg/m	DIMEN-SION "E" (mm)	SPLIT (mm)	BASE PLATE SIZE* (mm)	ANCHOR BOLTS DIA. NO.	ANCHOR BOLTS DIA. (mm)	PEDESTAL SIZE(mm) a	PEDESTAL SIZE(mm) b	FOOTING SIZE * (mm)	LONGITUDINAL FOOTING REINFORCEMENT TOP	LONGITUDINAL FOOTING REINFORCEMENT BOTTOM	CON-CRETE (m^3)
I	350	107.28	190	0	710 × 710 × 38	8	44	1170	1015	2440 × 3355	7 - #16 BARS	7 - #16 BARS	7.9
II	400	123.18	215	0	760 × 760 × 44	8	51	1220	1065	2745 × 3660	8 - #16 BARS	9 - #16 BARS	9.3
III	450	139.07	215	0	810 × 810 × 44	10	51	1270	1120	3050 × 3960	9 - #16 BARS	9 - #16 BARS	10.9
IV	500	154.97	215	0	860 × 860 × 50	10	57	1320	1170	3050 × 4260	10 - #16 BARS	10 - #16 BARS	11.7
V	450	139.07	215	180	990 × 810 × 50	10	57	1450	1120	2745 × 5180	10 - #16 BARS	10 - #22 BARS	12.5
VI	500	154.97	215	205	1270 × 860 × 57	10	57	1525	1170	2745 × 5790	11 - #16 BARS	11 - #22 BARS	13.8
VII	600	186.75	230	205	1170 × 970 × 57	10	64	1625	1270	3050 × 6100	11 - #16 BARS	11 - #22 BARS	16.2

* BASE PLATES, PEDESTAL, AND FOUNDATIONS. LONGER SIDES SHALL BE NORMAL TO AXIS OF SIGN.

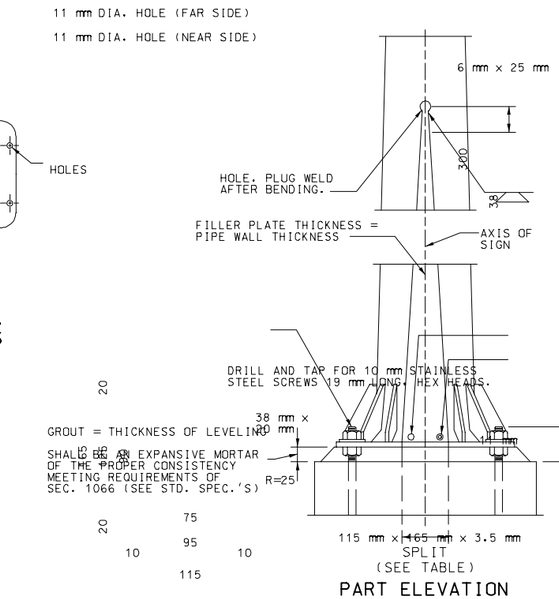

PART ELEVATION

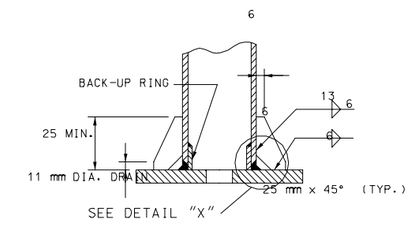

PART SECTION A-A

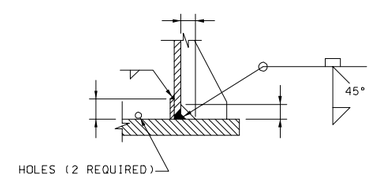

DETAIL "X"

GENERAL NOTES:

ALL DIMENSIONS SHOWN ARE IN mm UNLESS OTHERWISE NOTED.

MINIMUM CLEARANCE TO REINFORCEMENT IS 3" EXCEPT AS SHOWN.

ASTM A 106 GRADE B STEEL PIPE OR A TAPERED TUBE OF EQUIVALENT SIZE AND THICKNESS MAY BE SUBSTITUTED FOR PIPE POST.

ALL STEEL PIPE COLUMNS SHALL BE EITHER GRADE "B" SEAMLESS STEEL PIPE OR GRADE "B" ELECTRIC RESISTANCE WELDED STEEL PIPE: A.S.T.M. SPECIFICATION A53.

ALL STRUCTURES SHALL BE GROUNDED.

PIPE AND 1200 mm BELOW THE BOTTOM CHORDS OF THE TRUSS WHEN DETAILED ON THE BURR THREADS ON ALL ANCHOR BOLTS.

A HORIZONTAL WELDED SPLICE MAY BE FABRICATED IN THE COLUMN BETWEEN THE TOP OF SHOWN DRAWINGS AND APPROVED BY THE ENGINEER.

QUANTITIES FOR ANCHORAGE BASED ON NOMINAL HEIGHT OF 1500 mm.

GROUND LUGS SHALL BE LOCATED IN THE COLUMN NEAR ANCHOR HOLE.

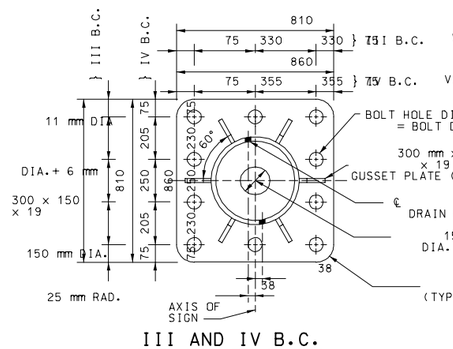

III AND IV B.C.
(10 ANCHOR TYPE)

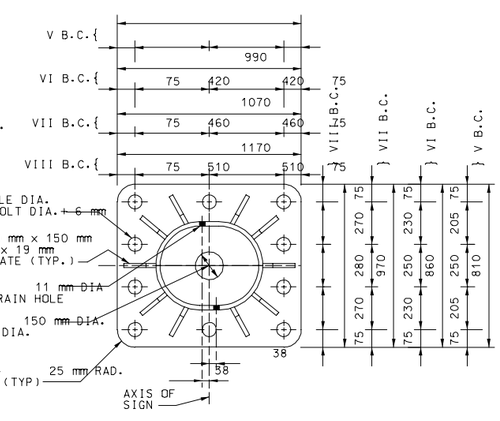

V, VI, VII AND VIII B.C.
(10 ANCHOR TYPE)

TYPICAL BASE PLATES

MISSOURI HIGHWAYS AND TRANSPORTATION COMMISSION

OVERHEAD SIGN TRUSSES
BUTTERFLY & CANTILEVER
STRUCTURAL STEEL

DATE:_____ EFFECTIVE: 04-01-2005 **M903.12U** 3/5

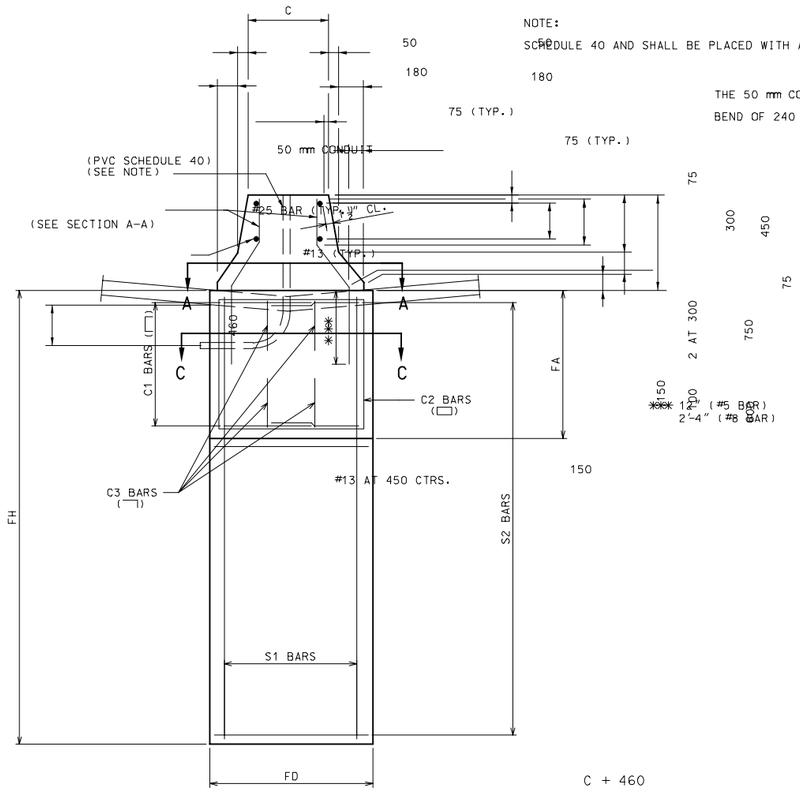

NOTE:
SCHEDULE 40 AND SHALL BE PLACED WITH A MIN. RADIUS

THE 50 mm CONDUIT IN THE CONCRETE PEDESTAL SHALL BE PVC
BEND OF 240 mm.

PART ELEVATION
(TYPE A CONCRETE TRAFFIC BARRIER)

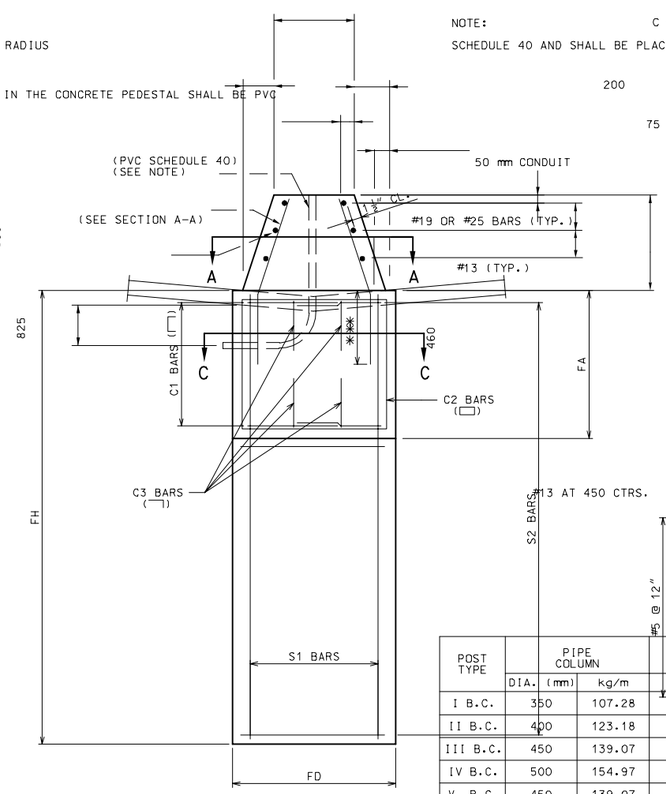

NOTE:
SCHEDULE 40 AND SHALL BE PLACED WITH A MIN. RADIUS

PART ELEVATION
(TYPE C CONCRETE TRAFFIC BARRIER)

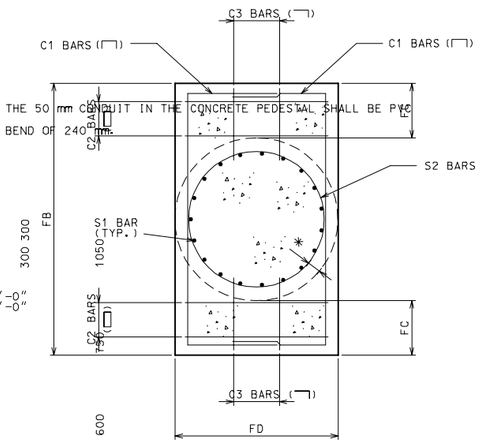

SECTION C-C
TYPICAL SECTION SHOWING
REINFORCING STEEL

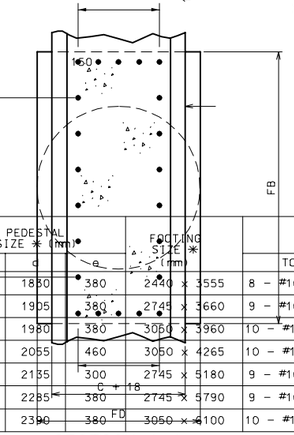

VERTICAL LEG OF C3 BARS SHALL BE PLACED INSIDE SHAFT S2 BARS

POST TYPE	PIPE COLUMN		PEDESTAL SIZE * (mm)			FOOTING SIZE * (mm)	LONGITUDINAL FOOTING REINFORCEMENT		m^3	
	DIA. (mm)	kg/m	c	d	e		TOP	BOTTOM		
I B.C.	350	107.28	760	1830	380	2440 x 3555	8 - #16 BARS	8 - #16 BARS	8.2	8.8
II B.C.	400	123.18	815	1905	380	2745 x 3660	9 - #16 BARS	9 - #16 BARS	9.3	10.0
III B.C.	450	139.07	865	1980	380	3050 x 3960	10 - #16 BARS	10 - #16 BARS	10.8	11.6
IV B.C.	500	154.97	915	2055	460	3050 x 4265	10 - #16 BARS	10 - #16 BARS	11.7	12.5
V B.C.	450	139.07	865	2135	300	2745 x 5180	9 - #16 BARS	10 - #22 BARS	12.4	13.2
VI B.C.	500	154.97	915	2285	380	2745 x 5790	9 - #16 BARS	10 - #22 BARS	13.9	14.7
VII B.C.	600	186.75	1015	2390	380	3050 x 6100	10 - #16 BARS	12 - #22 BARS	16.1	17.0

SECTION A-A

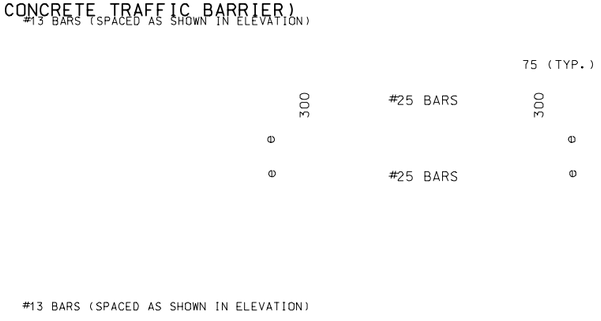

	CONCRETE (cu. yd.)			
	TYPE A	TYPE C	TYPE A	TYPE C

GENERAL NOTES:
MINIMUM CLEARANCE TO REINFORCEMENT IS 3" EXCEPT AS SHOWN.
ALL DIMENSIONS SHOWN ARE IN mm UNLESS OTHERWISE NOTED.
WHEN ROCK IS ENCOUNTERED AT A DEPTH NOT EXCEEDING "FH"/2 FOR FD > 3'-0" OR "FH"/4 FOR FD ≤ 3'-0", THE DIMENSION "FH" MAY BE ADJUSTED TO A MINIMUM OF 3 X "FD", SUBJECT TO APPROVAL BY THE ENGINEER.

CONTACT THE ENGINEER IF WATER TABLE IS ENCOUNTERED DURING EXCAVATION.

ASTM A 106 GRADE B STEEL PIPE OR A TAPERED TUBE OF EQUIVALENT SIZE AND THICKNESS MAY BE SUBSTITUTED FOR PIPE POST.

ALL STEEL PIPE COLUMNS SHALL BE EITHER GRADE "B" SEAMLESS STEEL PIPE OR GRADE "B" ELECTRIC RESISTANCE WELDED STEEL PIPE: A.S.T.M. SPECIFICATION A53.

ALL STRUCTURES SHALL BE GROUNDED.

BURR THREADS ON ALL ANCHOR BOLTS.

PIPE COLUMN, BASE PLATE, ANCHOR BOLTS AND NOTES PERTAINING TO THESE ITEMS ARE NOT INCLUDED IN THE PEDESTAL QUANTITIES FOR TYPE A MEDIAN BARRIER.

GROUND LUGS SHALL BE WELDED TO THE COLUMN NEAR THE BASE PLATE.

** BASE PLATES, PEDESTAL, AND FOUNDATION LONGER SIDES SHALL BE NORMAL TO AXIS OF SIGN.

DETAILS OF ALTERNATE PEDESTAL
(TO BE USED ADJACENT TO TYPE "A" OR "C" MEDIAN BARRIER)

MISSOURI HIGHWAYS AND TRANSPORTATION COMMISSION

OVERHEAD SIGN TRUSSES
BUTTERFLY & CANTILEVER
STRUCTURAL STEEL

DATE:_____ | EFFECTIVE: 04-01-2005 | M903.12U | 4/5

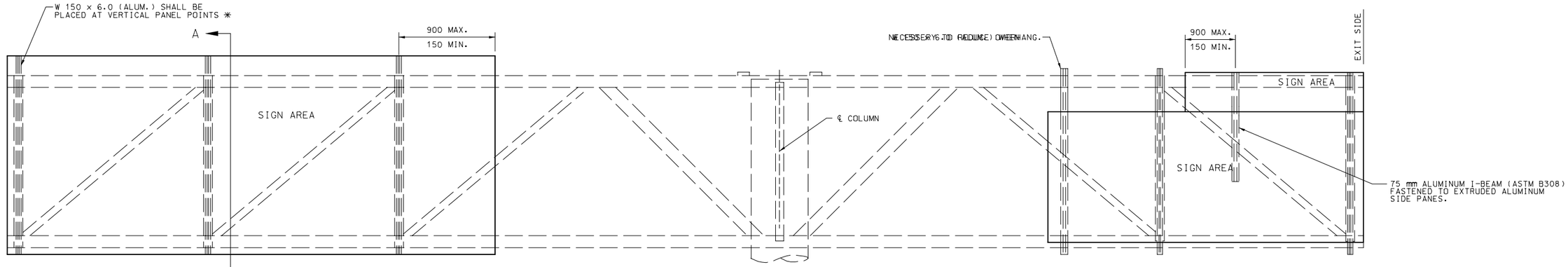

TYPICAL ELEVATION OF SIGNS COMPONENTS

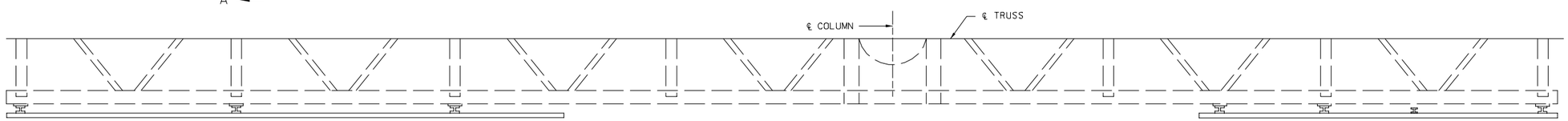

TYPICAL HALF-PLAN OF SIGN COMPONENTS

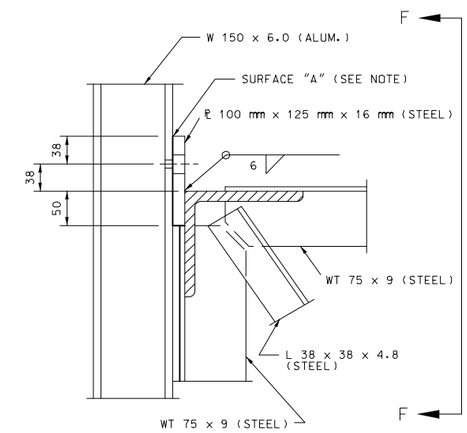

DETAIL 1

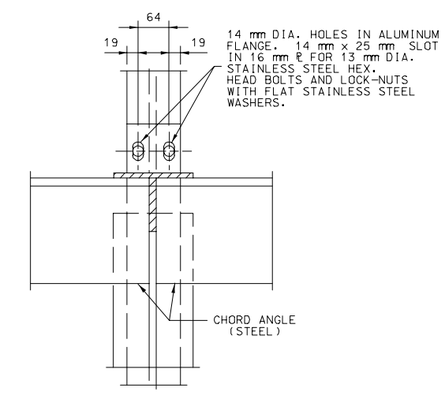

SECTION F-F

NOTE: SURFACE "A", ZINC CHROMATE ON ALUMINUM SURFACES. NORMAL CLEANING AND PAINTING ON STEEL SURFACES. ZINC CHROMATE IS NOT REQUIRED WHEN STEEL IS GALVANIZED.

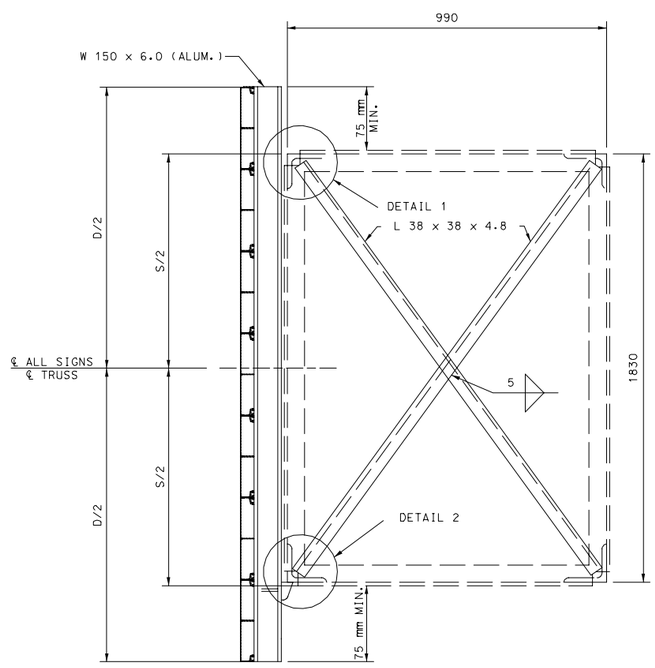

SECTION A-A

TYPICAL SECTION OF SIGN SUPPORT

NOTE: "D" = GREATEST OVERALL DEPTH OF ANY SIGNS ON TRUSSES.

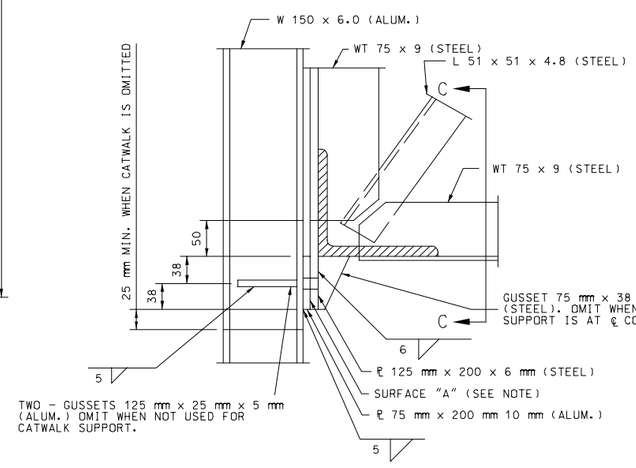

DETAIL 2

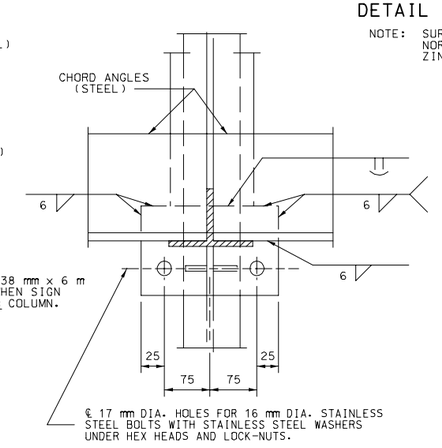

SECTION C-C

GENERAL NOTES:

ALL DIMENSIONS SHOWN ARE IN mm UNLESS OTHERWISE NOTED.

EXIT NO. PANELS SHALL BE MONTED FLUSH WITH THE EXIT SIDE OF THE GUIDE SIGN.

ALL SIGNS SHALL BE CENTERED VERTICALLY ABOUT THE HORIZONTAL ℄ OF THE TRUSS.

SEE STANDARD PLAN 903.03 FOR SIGN MOUNTING DETAILS.

MISSOURI HIGHWAYS AND TRANSPORTATION COMMISSION

OVERHEAD SIGN TRUSSES

STRUCTURAL STEEL BUTTERFLY & CANTILEVER

DATE: _____	EFFECTIVE: 04-01-2005	M903.12U	5/5